US009245164B2

(12) **United States Patent**
Pan et al.

(10) **Patent No.: US 9,245,164 B2**
(45) **Date of Patent: Jan. 26, 2016**

(54) **BIOMETRIC AUTHENTICATION DEVICE AND METHOD**

(71) Applicant: **TrueLight Corporation**, Hsinchu (TW)

(72) Inventors: **Jin Shan Pan**, Hsinchu (TW); **Chih Cheng Chen**, Zhongli (TW); **Chia Ching Chang Chien**, Kaohsiung (TW)

(73) Assignee: **TrueLight Corporation** (TW)

(*) Notice: Subject to any disclaimer, the term of this patent is extended or adjusted under 35 U.S.C. 154(b) by 278 days.

(21) Appl. No.: **13/788,959**

(22) Filed: **Mar. 7, 2013**

(65) **Prior Publication Data**

US 2014/0086459 A1 Mar. 27, 2014

(30) **Foreign Application Priority Data**

Sep. 27, 2012 (TW) ..... 101135647 A

(51) **Int. Cl.**
G06K 9/00 (2006.01)

(52) **U.S. Cl.**
CPC ***G06K 9/00006*** (2013.01); ***G06K 9/00046*** (2013.01); ***G06K 9/00892*** (2013.01); *G06K 2009/0006* (2013.01); *G06K 2009/00932* (2013.01)

(58) **Field of Classification Search**
None
See application file for complete search history.

(56) **References Cited**

U.S. PATENT DOCUMENTS

8,189,881	B1 *	5/2012	Smits	382/124
2004/0184641	A1 *	9/2004	Nagasaka et al.	382/124
2005/0169506	A1 *	8/2005	Fenrich et al.	382/127
2010/0245556	A1 *	9/2010	Kanda et al.	348/77
2011/0200237	A1 *	8/2011	Nakamura et al.	382/127

FOREIGN PATENT DOCUMENTS

JP	2004-265269	9/2004
JP	2006-72764	3/2006
JP	2007/534421	11/2007
JP	2008-269259	11/2008
JP	2010-503079	1/2010
JP	2010-131180	6/2010
WO	WO2009/019809	2/2009

OTHER PUBLICATIONS

Office Action for Taiwan Application 101135647.

* cited by examiner

Primary Examiner — Sumati Lefkowitz
Assistant Examiner — Ryan P Potts

(57) **ABSTRACT**

A biometric authentication device uses IR-VCSELs as light sources for performing a better biometric authentication by providing clearer images. A light guide module is introduced to minimize the size of the device. Moreover, the biometric authentication device uses a single image sensing module to gather the vein image and the fingerprint image into the same detection signal which is then analyzed and compared with the pre-stored vein feature data and fingerprint feature data. Therefore, the biometric authentication device can achieve an approach in lowering hardware costs, simplifying circuit designs and providing an outstanding performance.

18 Claims, 16 Drawing Sheets

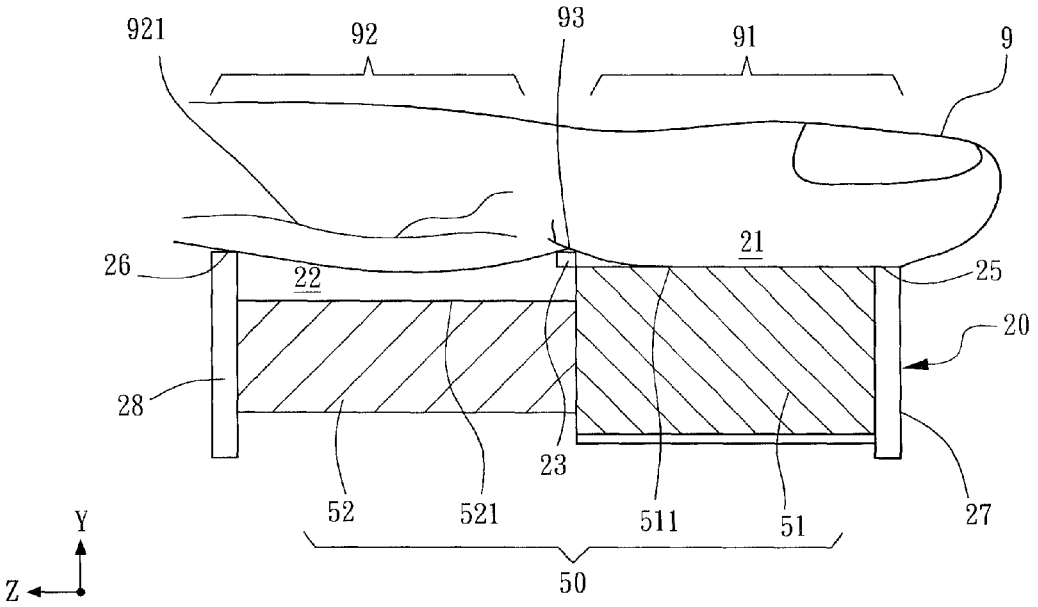

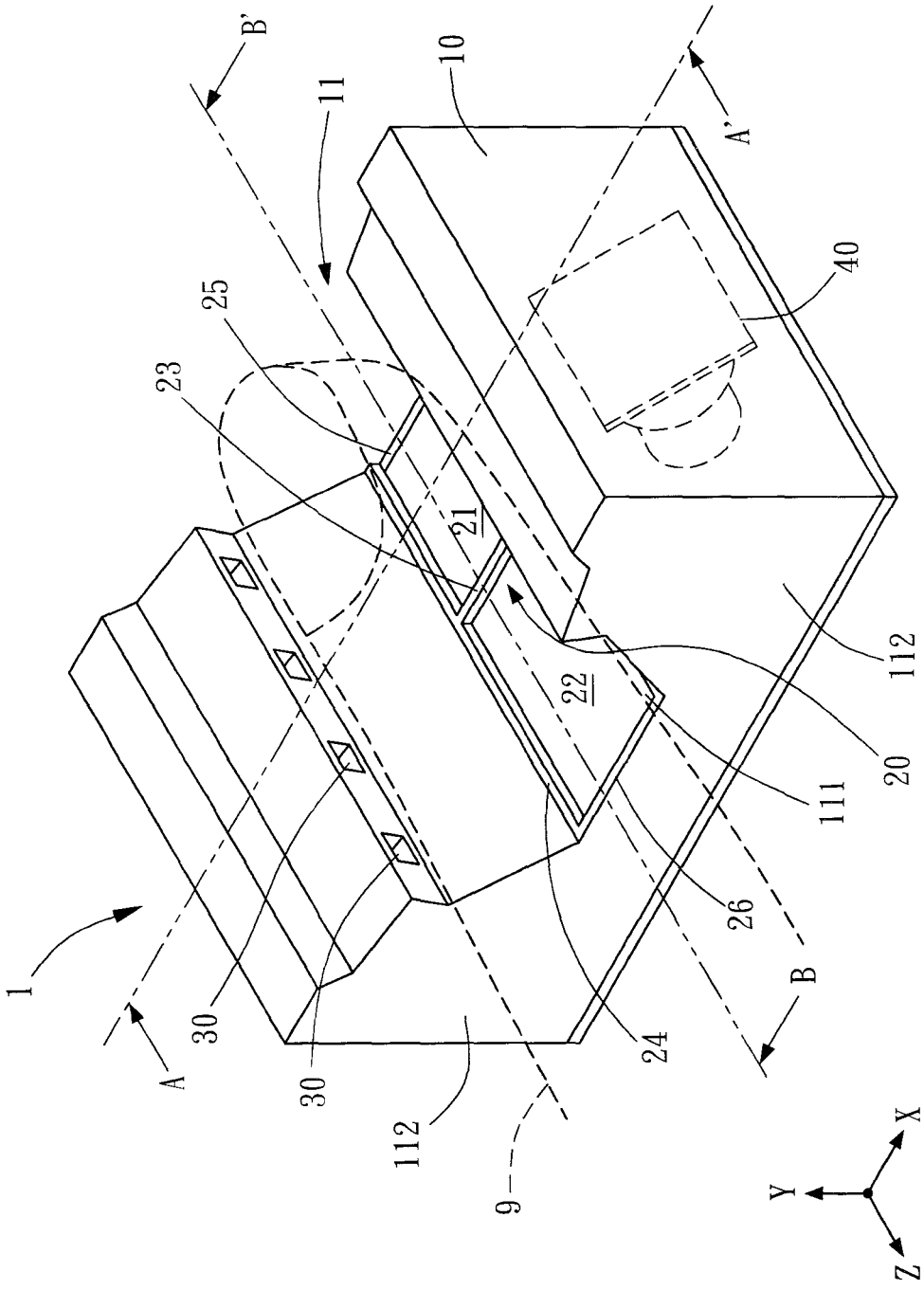

FIG. 1

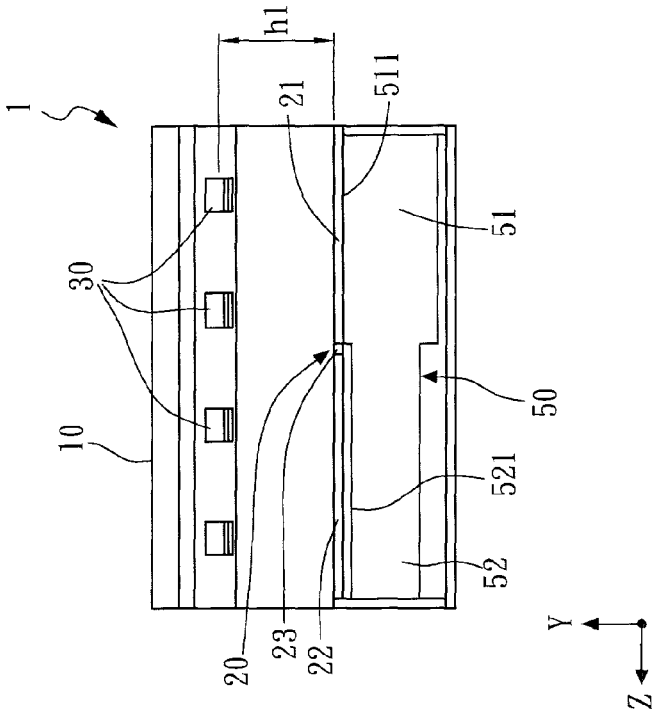
h1
1
21
511
51
30
50
10
521
52
20
23
22
Y
Z

FIG. 2B

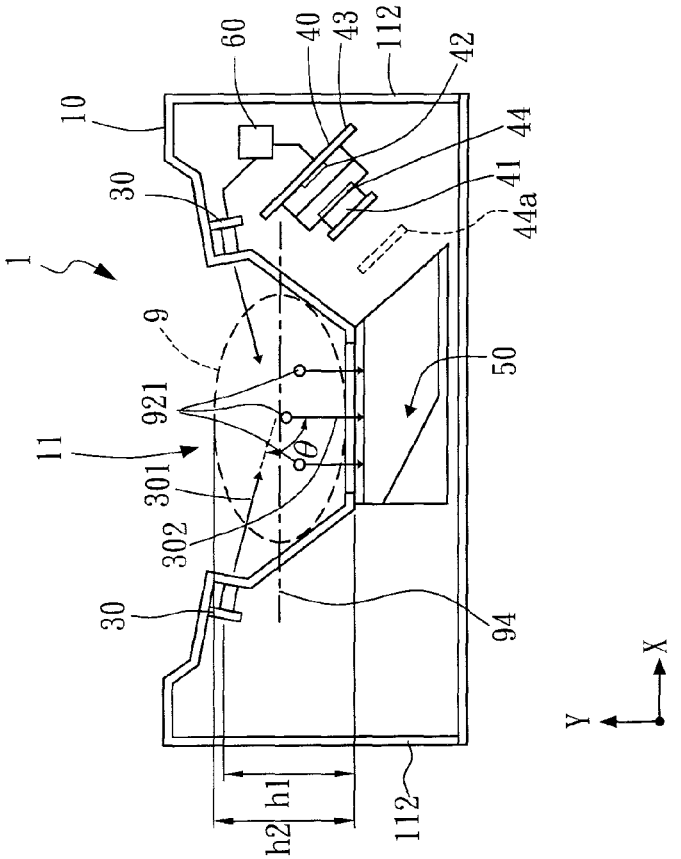
60
40
43
112
42
10
44
30
41
44a
1
9
50
921
11
θ
301
302
30
94
Y
X
h2
h1
112

FIG. 2A

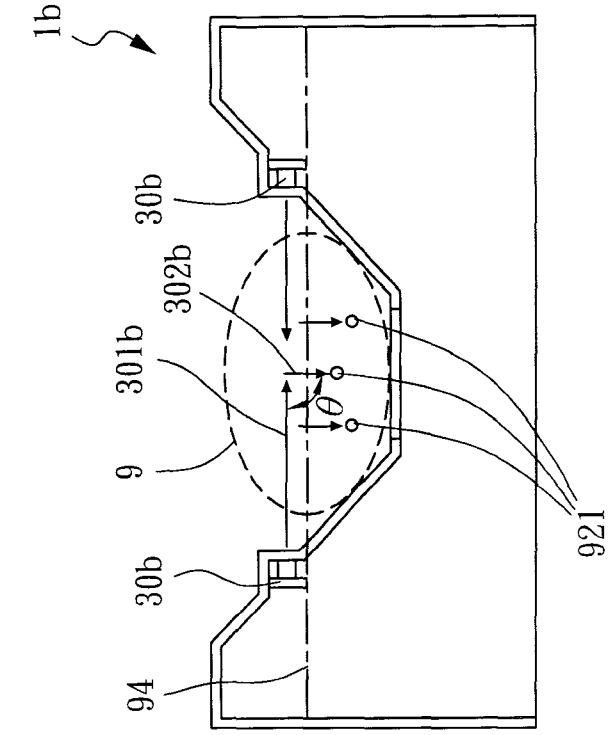

FIG. 3B

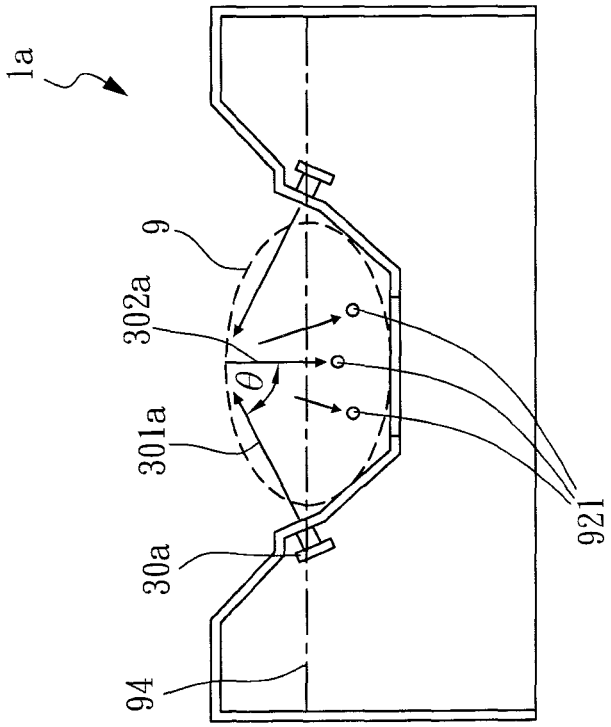

FIG. 3A

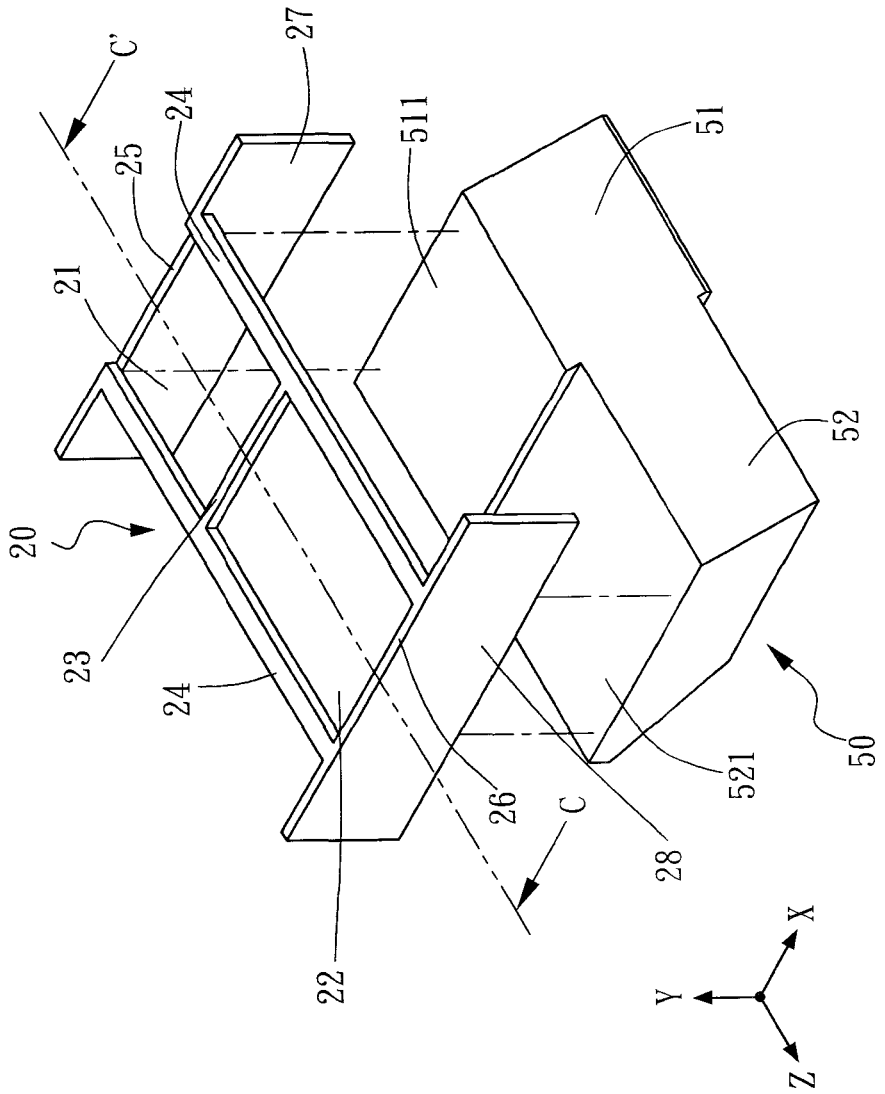

FIG. 4A

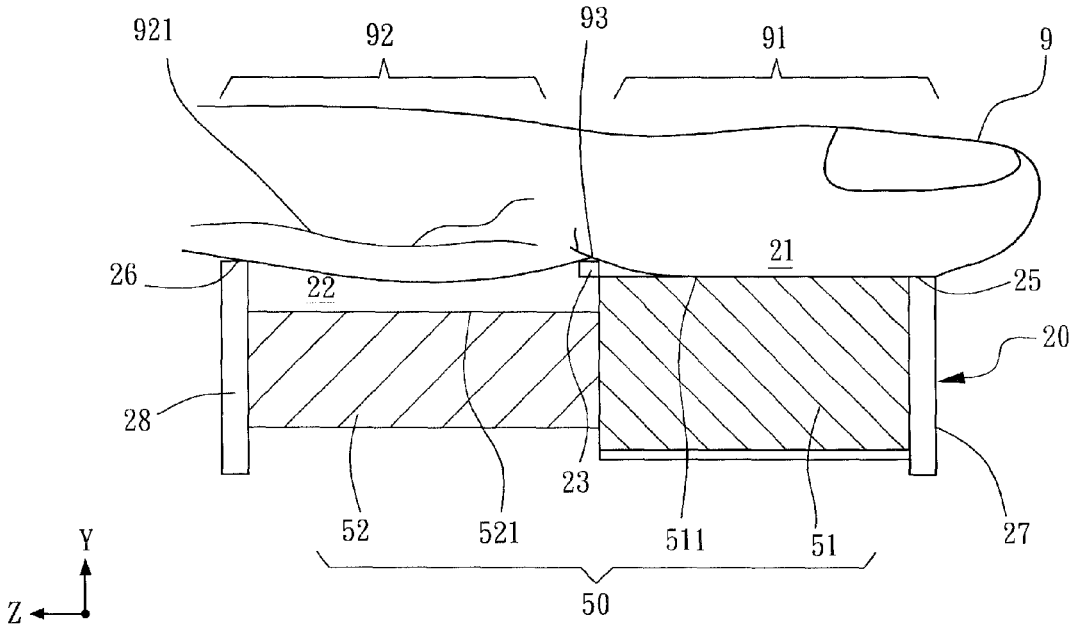

FIG. 4B

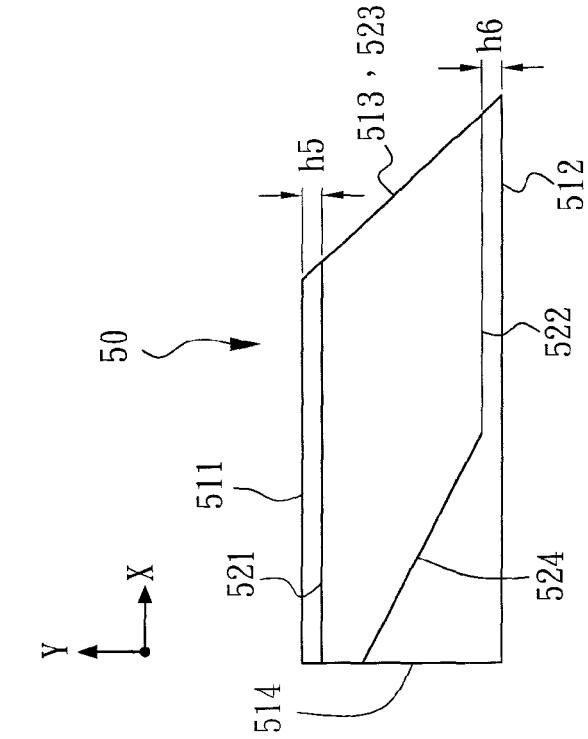
50
511
521
514
513 , 523
h5
h6
512
522
524
Y
X

FIG. 5B

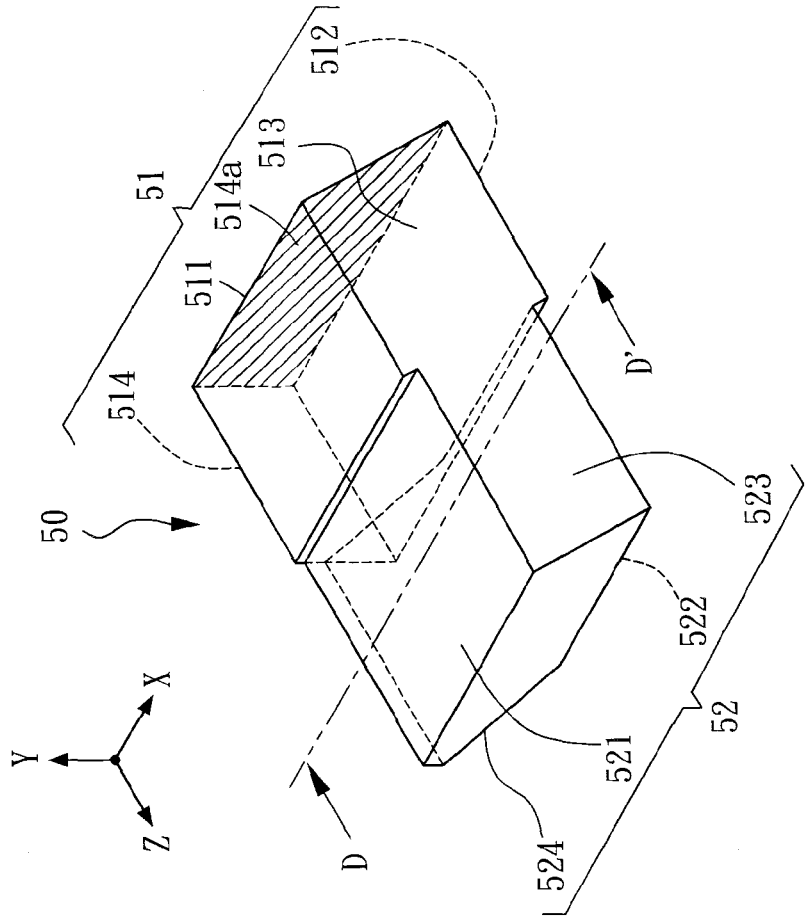
50
51
511
514a
513
512
514
523
522
521
524
52
D
D'
Y
X
Z

FIG. 5A

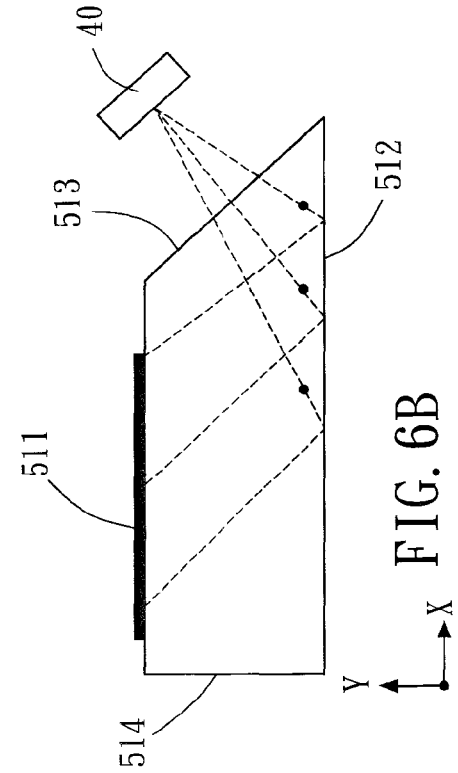

FIG. 6B

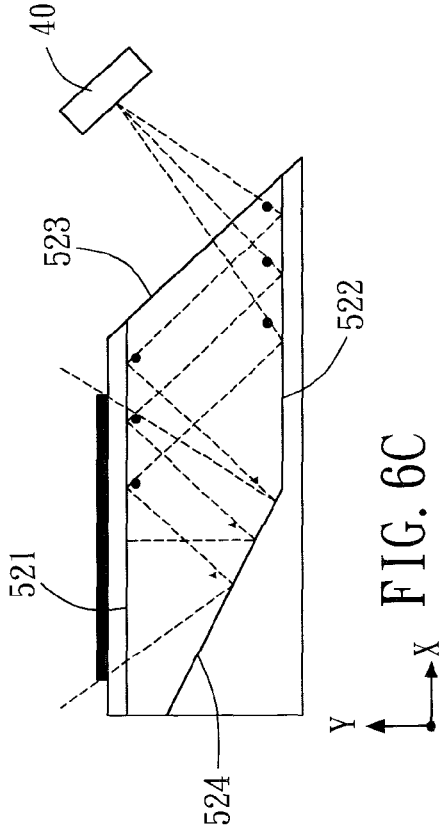

FIG. 6C

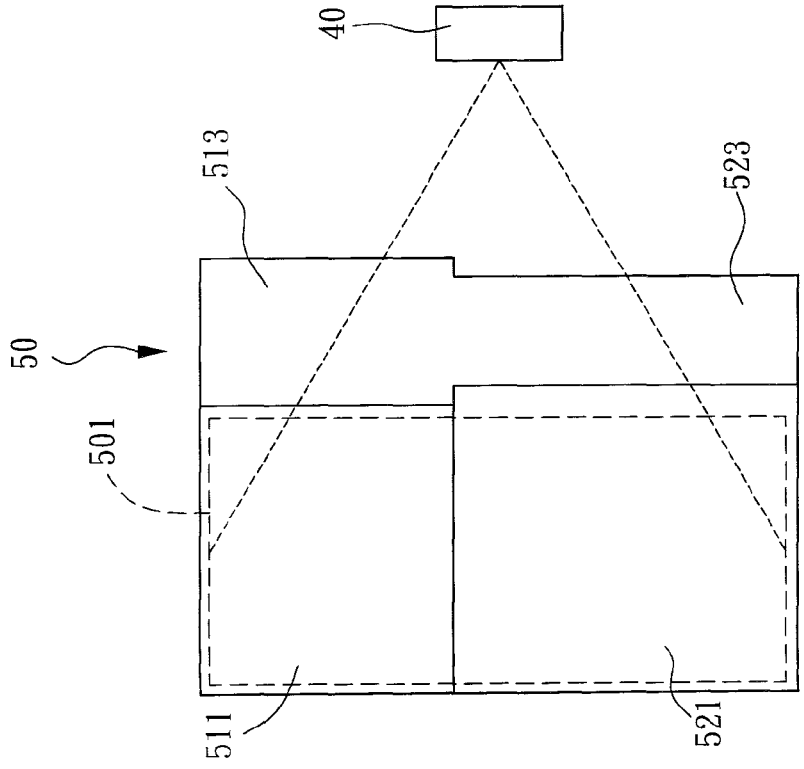

FIG. 6A

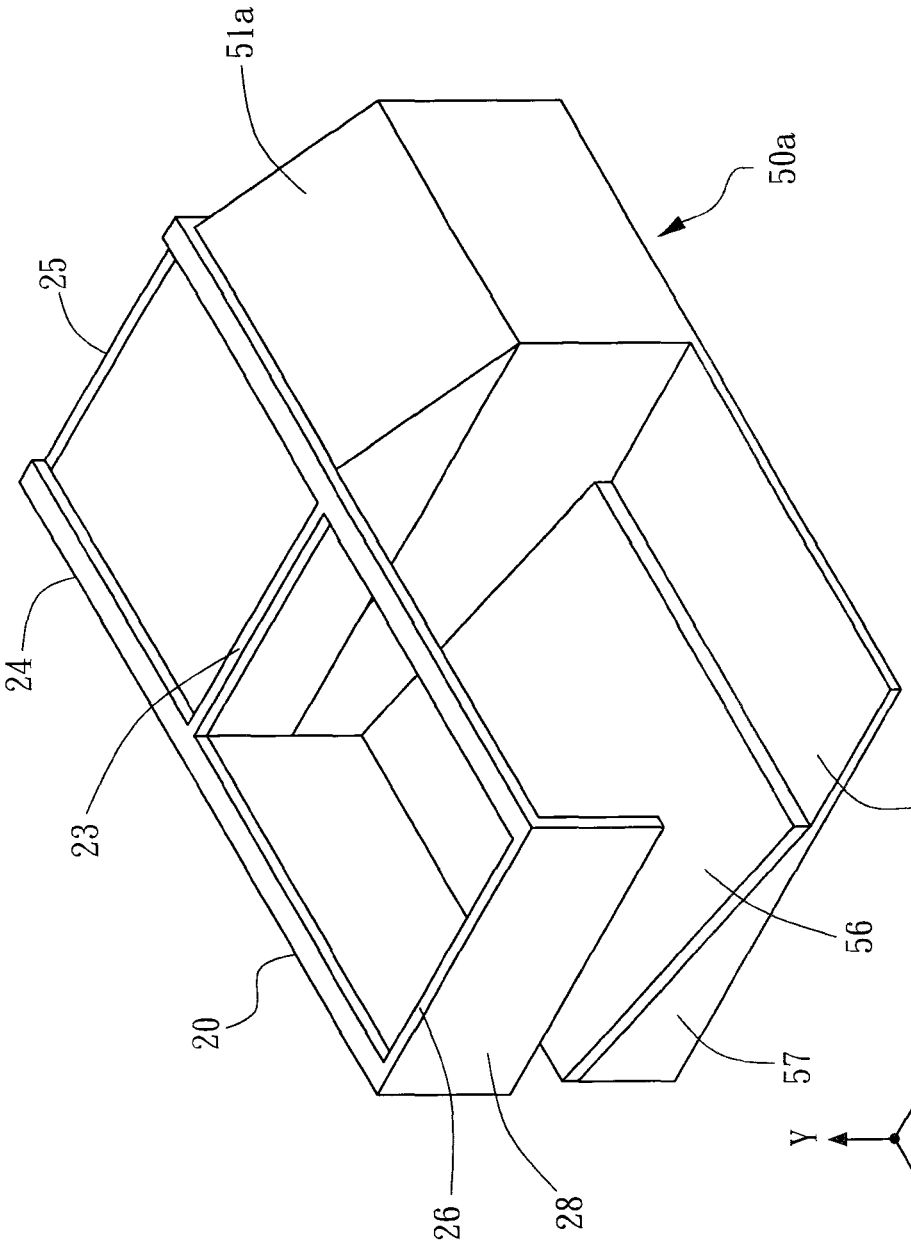

FIG. 7A

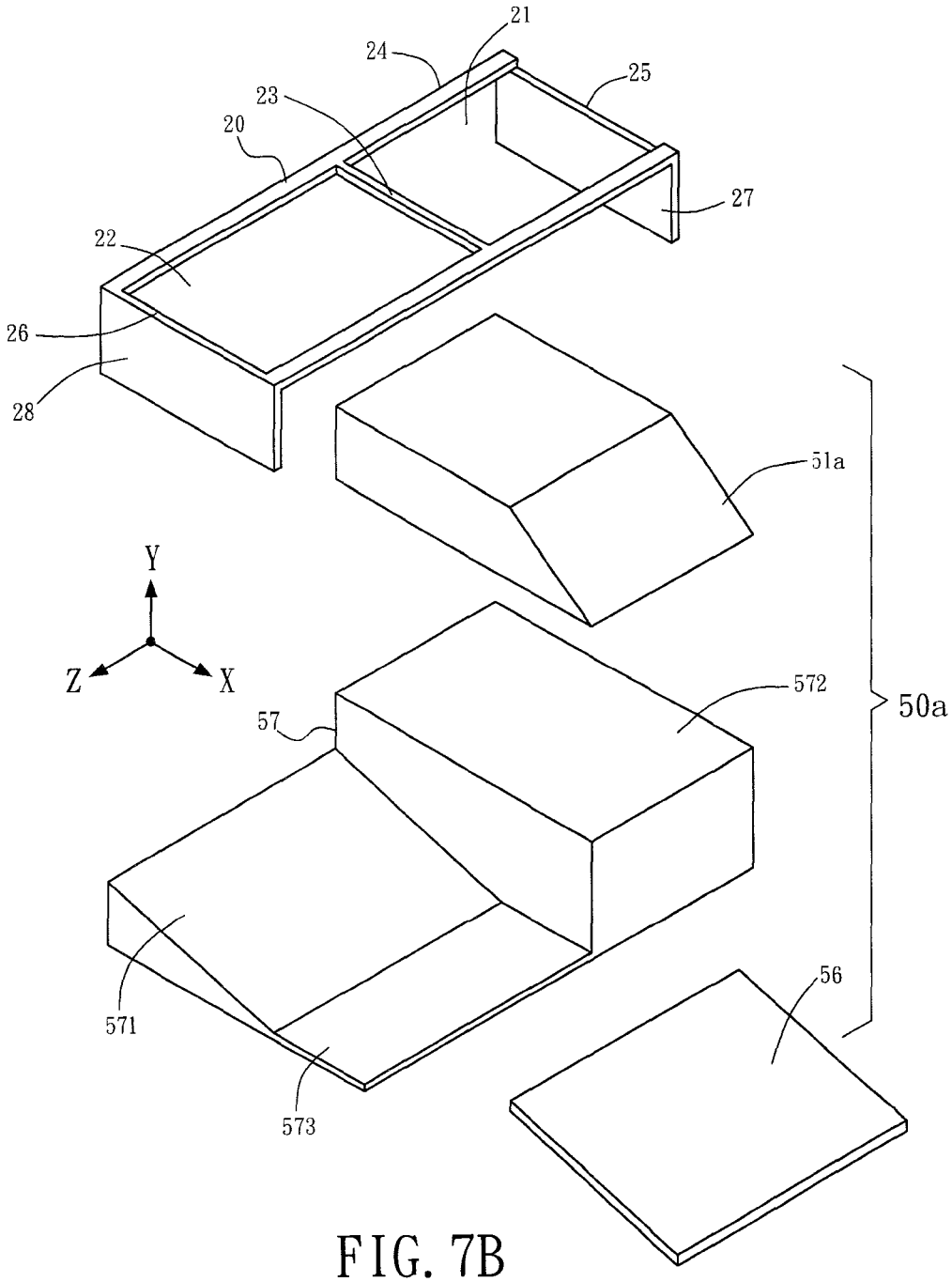

FIG. 7B

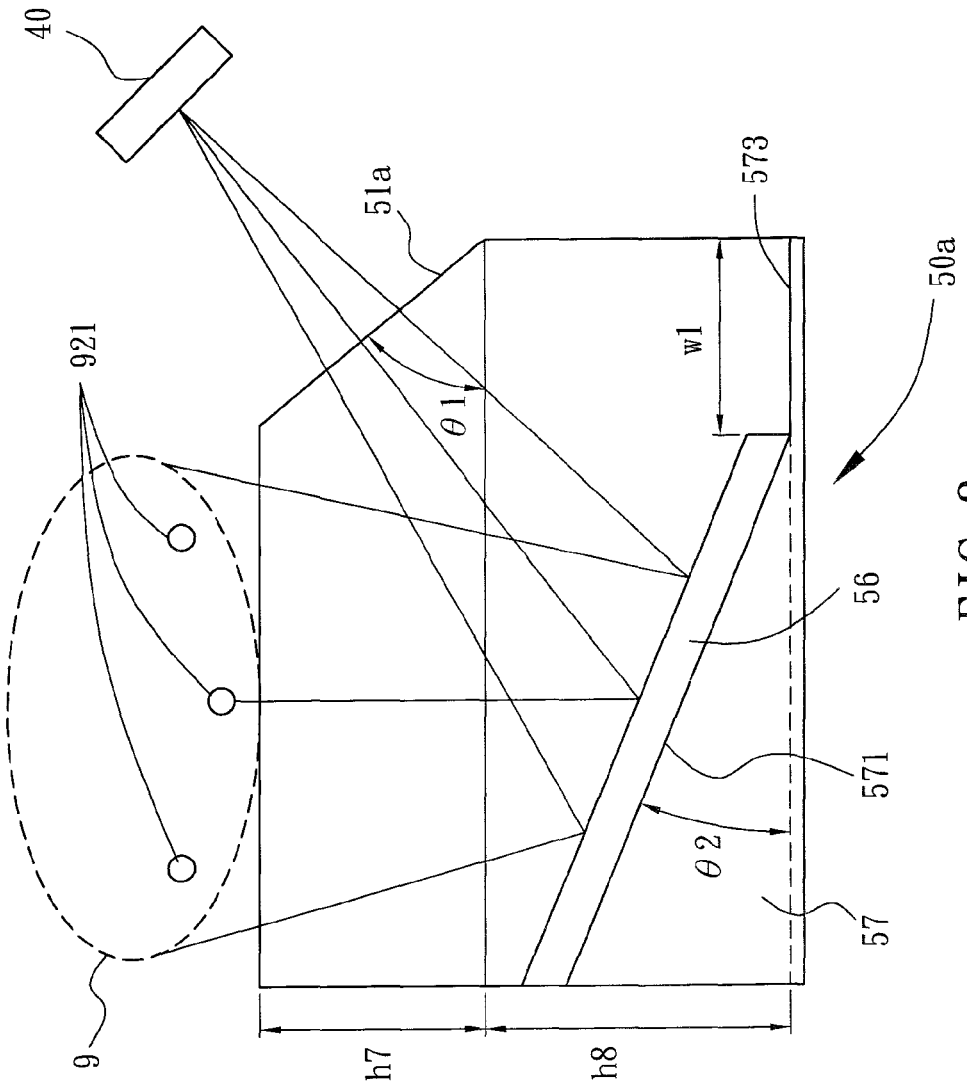

FIG. 8

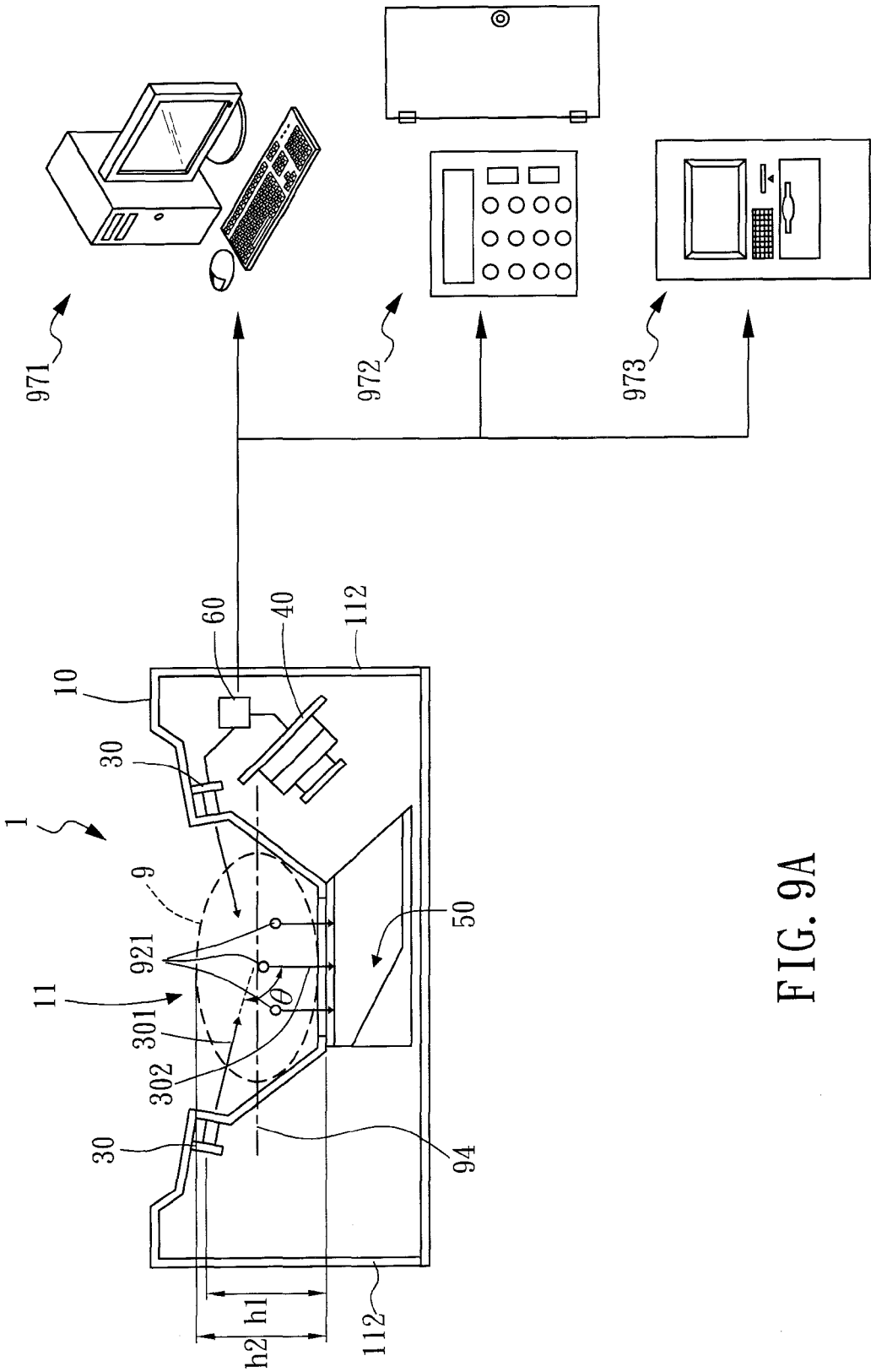

FIG. 9A

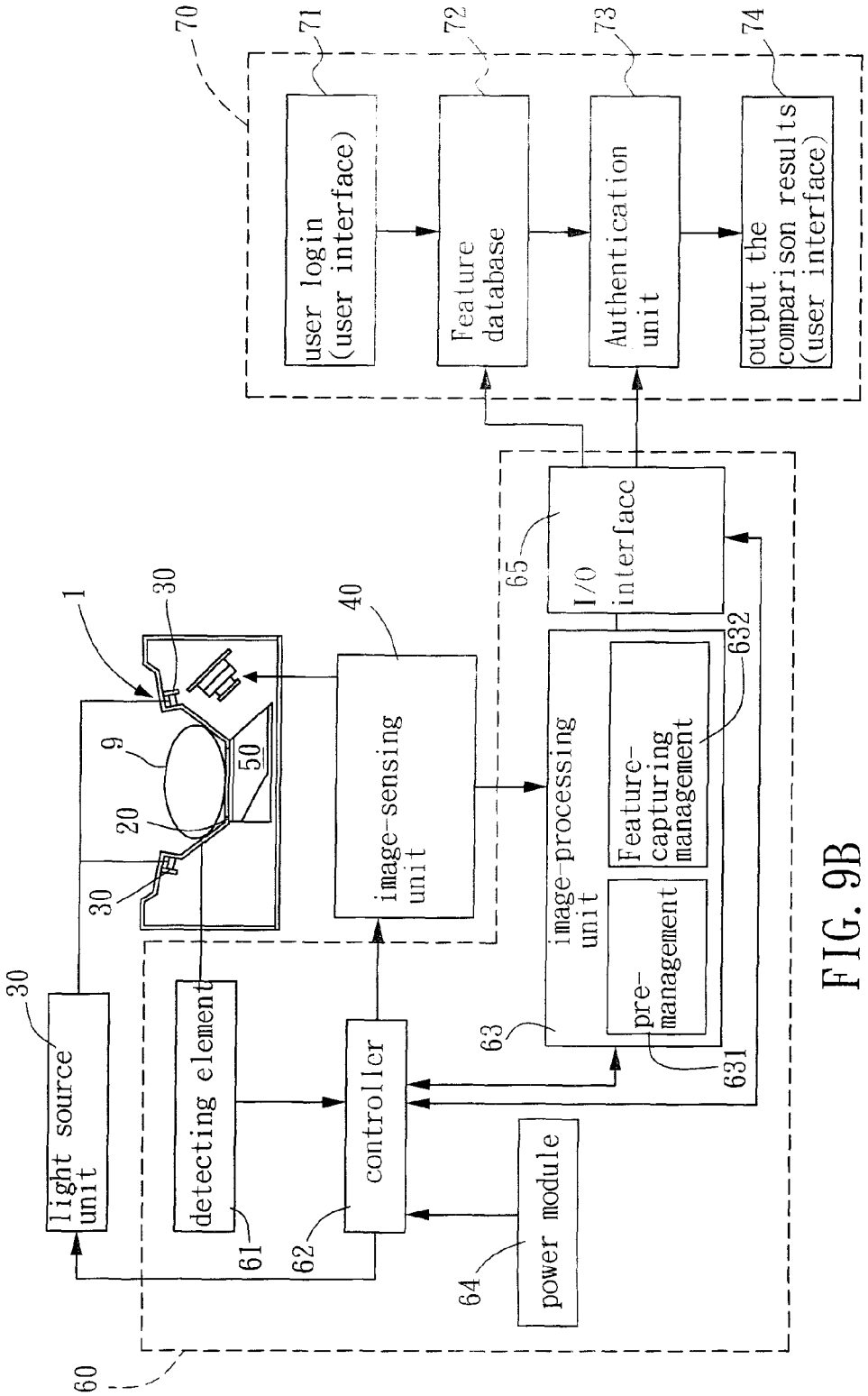
70
71
72
73
74
user login (user interface)
Feature database
Authentication unit
output the comparison results (user interface)
65
I/O interface
632
Feature-capturing management
image-processing unit
pre-management
631
63
40
image-sensing unit
1
30
9
50
20
30
30
light source unit
detecting element
61
controller
62
power module
64
60

FIG. 9B

FIG. 9C

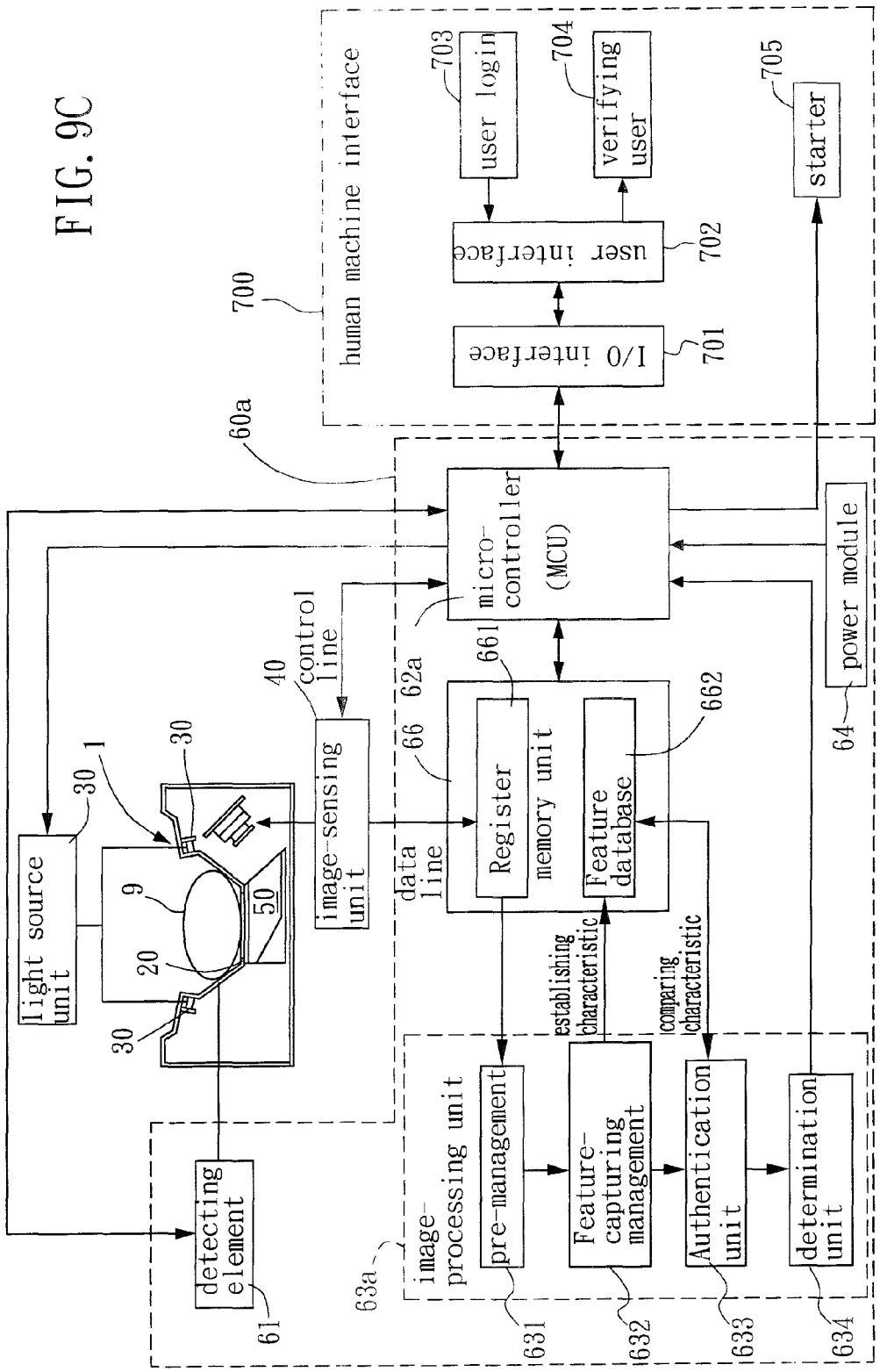
700
human machine interface
703
user login
704
verifying user
705
starter
user interface
702
I/O interface
701
60a
micro-controller (MCU)
power module
64
control line
40
image-sensing unit
62a
66
661
Register
memory unit
662
Feature database
data line
light source unit
30
1
9
20
50
establishing characteristic
comparing characteristic
detecting element
61
63a
image-processing unit
pre-management
Feature-capturing management
Authentication unit
determination unit
631
632
633
634

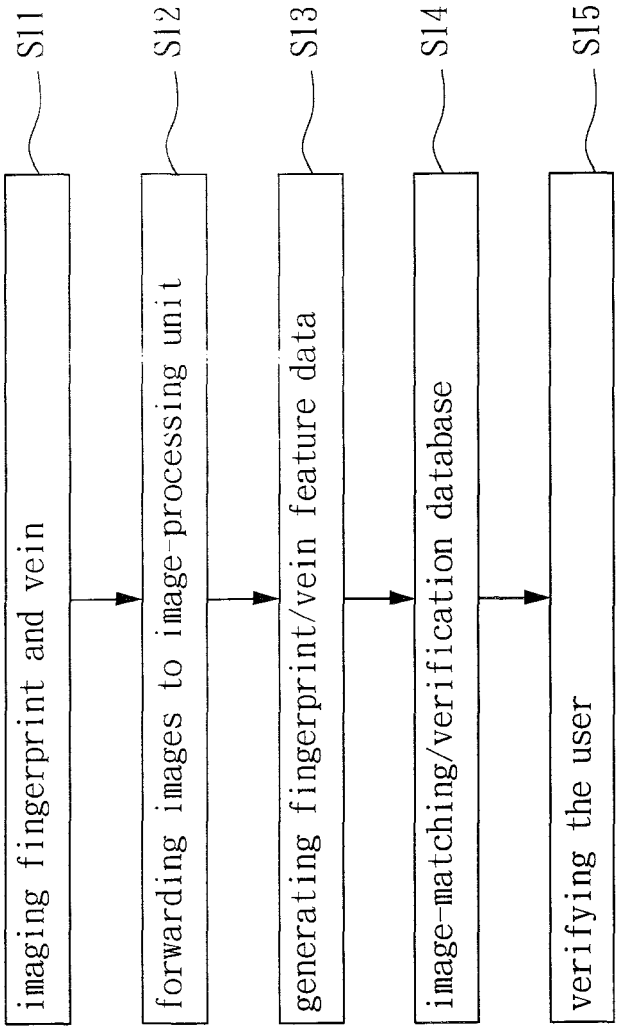
S11
imaging fingerprint and vein
S12
forwarding images to image-processing unit
S13
generating fingerprint/vein feature data
S14
image-matching/verification database
S15
verifying the user

FIG. 10

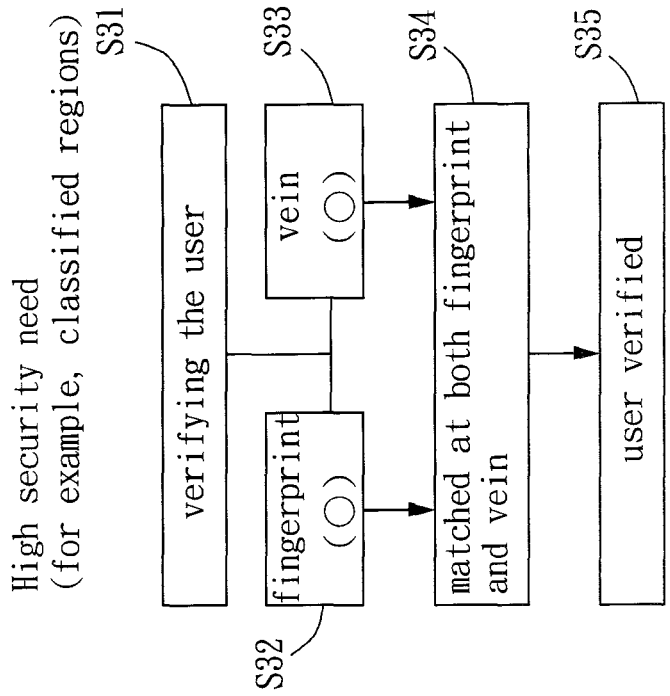

FIG. 11B

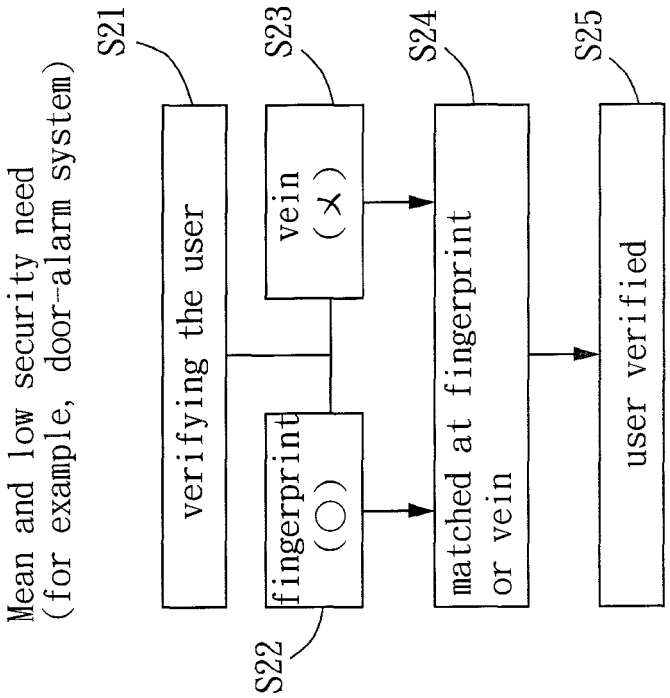

FIG. 11A

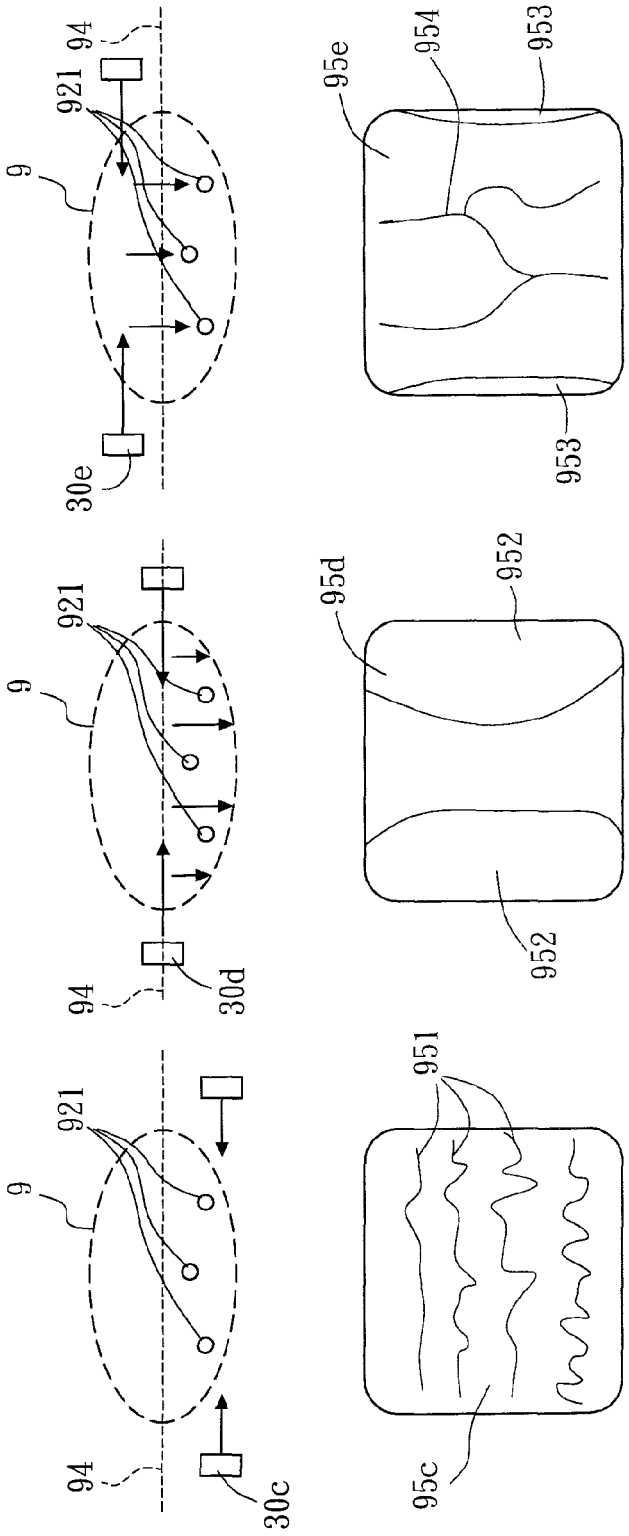

FIG. 12A

FIG. 12B

FIG. 12C

BIOMETRIC AUTHENTICATION DEVICE AND METHOD

This application claims the benefit of Taiwan Patent Application Serial No. 101135647, filed Sep. 27, 2012, the subject matter of which is incorporated herein by reference.

BACKGROUND OF INVENTION

1. Field of the Invention

The invention relates to a device and a method for biometric authentication, and more particularly to the biometric authentication device and method which include the image-capturing and detecting the fingerprint and vein images of a user finger for identification.

2. Description of the Prior Art

To ensure security over conventional digital personal identification techniques such as those applying personal identification numbers, digital keys, hardware keys having built-in smart chips and so on, more and more personal identification and security systems are interested in adopting biometric authentication apparatuses, such as the biometric authentication apparatus by judging the fingerprints and/or vein growth under the skin.

In the art, the fingerprint authentication technique can be seen in various Taiwan patents, such as those having the publication numbers 565094, M343215 and 201145179. Yet, in all of those teachings, the identification technique does involve only the identification upon fingerprints. Such a single biometric authentication means obviously provides only limited security protections. Further, in the aforesaid teachings, visible light sources are commonly used and thus inhibited to further detections, for example the investigation through the vein growth of the finger. The foregoing visible light sources are reflective light sources and are projected upward onto the contact surface between the first finger member of user finger and the device so as to generate reflective lights from the contact surface, which is further captured by the device to analyze the fingerprint image. However, though the vein image can be formed by the hemoglobin absorbing lights with specific wavelengths, yet these particular lights with specific wavelengths do not include the visible lights. Furthermore, this conventional fingerprint authentication needs to go through the finger to be depressed substantially onto the contact surface, and such a depression would change the density of the depressed portion on the finger and thus change the original distribution of the veins thereinside. Therefore, it is obvious that the aforesaid authentication method can only be applied to identify the fingerprint, but not relevant to the vein structure inside the first finger member of the tested finger.

In a US patent with a publication number 20090185726, a 4-in-1 imaging apparatus is provided able to recognize an image for authentication of a user in reading the fingerprint, the finger vein, the palm and the palm vein. However, in this disclosure, only two application pairs are included; in which one is the pair of the fingerprint and the finger vein, and another is the pair of the palm and the palm vein. From the teaching, a time-division is performed to control two reflective light sources at different positions for processing the feature identifications. That is to apply a light source to verify the fingerprint and/or the palm, and another light source to verify the finger vein and/or the palm vein. Apparently, in this teaching, one more control circuit is required to share the identifications and thus complicated circuiting design is inevitable.

In two related Taiwan patents with publication numbers M375256 and 201211914, vein identification techniques are taught, respectively. However, a common feature in between is that only the vein authentication technique is provided, and so it is clear that such an identification application is less secured. Further, in M375256, the whole apparatus is too big in occupation for lacking a relevant light guiding mechanism, while, in 201211914, neither an appropriate optical system nor a light guiding mechanism is disclosed.

In a Taiwan patent with a publication number 200947315, a technique to verify both the fingerprint and the finger vein is disclosed. However, in this teaching, major efforts are focused on circuit design and data processing in image and identification verifications, and again neither an appropriate optical system nor a light guiding mechanism is disclosed. Further, in this teaching, 2-D capacitor types of the fingerprint image sensor and the vein image sensor are introduced to perform in order the fingerprint image and the vein image, and it is apparently that such an application can only contribute to a high hardware cost. Also, for two image sensors for different imaging processes are needed in this teachings, thus substantial difficulties and complexities in circuiting and imaging can be foreseen.

In a US patent with a publication number 20110129128, a technique to verify both the fingerprint and the finger vein is also disclosed. In this teaching, major efforts are focused on circuit design and data processing in image and identification verifications, and again neither an appropriate optical system nor a light guiding mechanism is disclosed. Further, in this teaching, a resistance type or a capacitor type of semiconductor sensing plate is introduced to detect the fingerprint, while another image sensor accompanying a light source is to capture and identify the vein image. Obviously, different sensors for imaging the fingerprint and the vein can result in a higher hardware cost and more complicated circuiting for providing two sets of sensors for separate image capturing and data processing.

In all the foregoing teachings, a common shortcoming is noticed. The common shortcoming is to regard the vein authentication method in palm or fingers, in which the feature of the oxygen-deficient hemoglobin in the vein to absorb lights with specific wavelengths is utilized to make possible the image capturing and further analyzing upon the vein by the CMOS or CCD, before a verification upon a user according to his/her biometric can be performed. However, according to the present art, the IR LED is the most popular light source and has a wider spectrum by compared to a laser diode. A wider spectrum for the IR LED implies that part of the lights would be absorbed by the peripheral tissues around the vein and consequently noises would be generated therefrom to further form obstacles for further image analysis. Therefore, by compared to the laser diode as a light source, the IR LED can only obtain an obscure image and thus an improvement thereupon is clear.

SUMMARY OF THE INVENTION

Accordingly, A first purpose of the present invention is to provide a biometric authentication device, which an Infra-red (IR) Vertical-cavity Surface-emitting Laser (VCSEL) is used as a light source for the device. By utilizing the VCSEL to obtain more clear images for biometric authentication, the later-stage processing upon the images can be benefited therefrom so that the cost can be reduced and the performance can be enhanced by capturing more clearer and contrast enhanced

images, by simplifying the following signal-processing and comparison, and by efficiently applying the software and the later stage elements.

A second purpose of the present invention is to provide a biometric authentication device that can use a particular optical light guide mechanism to miniaturize the biometric authentication module such that the device can be applied to the portable apparatus such as notebook computers, tabular computers, and smart mobile phones.

A third purpose of the present invention is to provide a biometric authentication device and method that can introduce a single image-sensing unit to simultaneously capture both the vein image and the fingerprint image into the same sensor signal so as to carry out follow-up analysis upon the vein and the fingerprint characteristics. Also, the feature of requiring only an image-sensing unit can contribute to reduce the hardware cost, to simplify the circuiting design of the circuit board, and to provide an efficiency processing.

In the present invention, the biometric authentication device for identifying at least a biometric on a portion of the creature (portion-to-be-verified and PTBV, thereinafter) includes:

a carrier base, having an upper opening for receiving the portion-to-be-verified, which the upper opening further has a base plane and at least one lateral surface;

a position structure, located at the carrier base at a position respective to the upper opening, the position structure being used to assist the portion-to-be-verified to anchor at a predetermined position at the carrier base in the upper opening;

at least one light source unit, located at the at least one lateral surface of the carrier base respective to the upper opening; in the case that the portion-to-be-verified reaches the predetermined position, the at least one light source unit being positioned laterally to the portion-to-be-verified, the at least one light source unit being able to project a lateral light onto the portion-to-be-verified, and at least one corresponding image response being generated;

a light guide module, located inside the carrier base at a position under the base plane respective to the upper opening; and

an image-sensing unit, located inside the carrier base to receive the at least one image response and further to form thereby a corresponding detection signal readable to a computer.

In one embodiment of the present invention, the biometric authentication device can further include a filter of visible lights mounted inside or outside the lens of the image sensor so as thereby to filter out the visible lights and thus to increase the pattern identification on lights of specific wavelengths.

To achieve the aforesaid first purpose of the present invention, the at least one light source unit further includes a plurality of Infra-red Vertical-cavity Surface-emitting Lasers (IR-VCSELs), and a vertical height h**1** between a mean central point of the at least one light source unit at a perpendicular direction and the base plane of the upper opening is no less than one half of a mean vertical thickness h**2** of the PTBV. By utilizing the VCSELs and/or IR-VCSELs to obtain more clear images for biometric authentication, the later-stage processing upon the images can be benefited therefrom so that the cost can be reduced and the performance can be enhanced by capturing more clearer and contrast-enhanced, by simplifying the following signal-processing and comparison, and by efficiently applying the software and the later stage elements.

To achieve the aforesaid second purpose of the present invention, the light guide module can have at least one prism unit and be separated into a fingerprint-detecting area and a vein-detecting area. When the at least one lateral light projects on the PTBV, a fingerprint image and a vein image can be formed on the image-sensing unit through the fingerprint-detecting area and the vein-detecting area of the light guide module, respectively. Hence, such a particular optical light guide mechanism of the present invention can efficiently miniaturize the biometric authentication module.

To achieve the aforesaid third purpose of the present invention, by providing the at least one light source unit to project the at least lateral light onto the PTBV, a fingerprint image and a vein image corresponding to the PTBV can be formed simultaneously. The fingerprint image and the vein image are formed on the image-sensing unit through the light guide module. Hence, the detection signal produced by the image-sensing unit and being readable to a computer can contain simultaneously messages of the fingerprint image and the vein image. Also, the feature of requiring only an image-sensing unit to obtain both kinds of images can contribute to reduce the hardware cost, to simplify the circuiting design of the circuit board, and to provide an efficiency processing.

In addition, according to the present invention, the biometric authentication method for verifying at least a biometric on a portion of a creature (portion-to-be-verified or PTBV, thereinafter) comprises the steps of:

providing a biometric authentication device, in which the biometric authentication device further includes a carrier base, at least one light source unit, an image-sensing unit and a control module; the carrier base being used to receive the PTBV, the at least one light source unit being to project a light onto the PTBV so as to generate a fingerprint image and a vein image corresponding to the PTBV, the image-sensing unit being to receive the fingerprint image and the vein image and thereby further to generate a detection signal readable to a computer; wherein the detection signal includes simultaneously messages of the fingerprint image and the vein image; wherein the control module connecting electrically at least with the at least one light source unit and the image-sensing unit is to receive the detection signal from the image-sensing unit;

arranging the PTBV to the biometric authentication device so as thereby to generate simultaneously the detection signal including the messages of the fingerprint image and the vein image;

the control module of the biometric authentication device receiving the detection signal and further extracting thereinside a fingerprint feature data from the fingerprint image and a vein feature data from the vein image; and

applying a comparison unit to compare the fingerprint feature data and the vein feature data received from the image-sensing unit of the control module with the fingerprint feature data and the vein feature data pre-stored in the feature database so as to generate and output a comparison result.

In one embodiment of the present invention, the biometric authentication device can further include a filter of visible lights mounted inside or outside the lens of the image sensor so as thereby to filter out the visible lights and thus to enhance the image performance on lights of specific wavelengths.

All these purposes are achieved by the biometric authentication device and method described below.

BRIEF DESCRIPTION OF THE DRAWINGS

The present invention will now be specified with reference to its preferred embodiment illustrated in the drawings, in which:

FIG. **1** is a schematic perspective view of a first embodiment of the biometric authentication device in accordance with the present invention;

FIG. **2**A is a cross-sectional view of FIG. **1** along line A-A';

FIG. **2**B is a cross-sectional view of FIG. **1** along line B-B';

FIG. **3**A shows another embodiment of the light source unit in accordance with the present invention;

FIG. **3**B shows a further embodiment of the light source unit in accordance with the present invention;

FIG. **4**A shows explodedly the position structure **20** and the light guide module **50** of FIG. **1**;

FIG. **4**B is a schematically cross-sectional view of FIG. **4**A along line C-C';

FIG. **5**A is a perspective view of the light guide module **50** of FIG. **1**;

FIG. **5**B is a side view of FIG. **5**A;

FIG. **6**A shows schematically, in a top view, the effective detection area above the prism unit of the light guide **50** of FIG. **1**;

FIG. **6**B shows schematically the optical path in the fingerprint-detecting area **51** of the prism unit of FIG. **6**A;

FIG. **6**C shows schematically the optical path in the vein-detecting area **52** of the prism unit of FIG. **6**A;

FIG. **7**A is a perspective view of another embodiment of the light guide module **50***a* and the position structure **20** in accordance with the present invention;

FIG. **7**B is an exploded view of FIG. **7**A;

FIG. **8** shows schematically the optical path of the light guide module **50***a* of FIG. **7**A;

FIG. **9**A shows an application of the biometric authentication device of FIG. **1** to a biometric authentication system;

FIG. **9**B shows a block diagram of a first embodiment of the control module for the biometric authentication device of the present invention;

FIG. **9***c* shows a block diagram of a second embodiment of the control module for the biometric authentication device of the present invention;

FIG. **10** is a simplified flowchart to demonstrate the biometric authentication method in accordance with the present invention;

FIG. **11**A shows schematically a typical application of the biometric authentication method of the present invention to a mean or low-level security need environment;

FIG. **11**B shows schematically a typical application of the biometric authentication method of the present invention to a high security need environment;

FIG. **12**A shows schematically a first example of vein detection in accordance with the present invention;

FIG. **12**B shows schematically a second example of vein detection in accordance with the present invention; and

FIG. **12**C shows schematically a third example of vein detection in accordance with the present invention.

DESCRIPTION OF THE PREFERRED EMBODIMENT

The invention disclosed herein is directed to a device and a corresponding method for biometric authentication of a creature. In the following description, numerous details are set forth in order to provide a thorough understanding of the present invention. It will be appreciated by one skilled in the art that variations of these specific details are possible while still achieving the results of the present invention. In other instance, well-known components are not described in detail in order not to unnecessarily obscure the present invention.

Referring now to FIG. **1**, FIG. **2**A and FIG. **2**B, a perspective view of the first embodiment of the biometric authentication device in accordance with the present invention, a cross-sectional view along line A-A' of FIG. **1** and a cross-sectional view along line B-B' of FIG. **1** are shown, respectively. In this embodiment, the biometric authentication device **1** for verifying at least a biometric on a portion of the creature (portion-to-be-verified and PTBV, thereinafter) includes a carrier base **10**, a position structure **20**, at least one light source unit **30**, an image-sensing unit **40**, a light guide module **50** and a control module **60**. In the present invention, the PTBV is embodied as a finger; particularly and preferably, the first finger member and the second finger member of the index finger. However, the PTBV can also be any of the middle finger, the thumb, the ring finger and the little finger.

The carrier base **10** has an upper opening **11** for receiving the PTBV **9**, in which the upper opening **11** further has a base plane **111** and at least one lateral surface **112**. In this embodiment as shown, the carrier base **10** includes two opposing lateral surfaces **112** extending upright to the respective sides of the base plane **111** so as to form a U shape structure in the carrier base **10**, referred to FIG. **2**A. The middle empty portion of the U shape structure in the carrier base **10** is the upper opening **11**. In the case that the finger **9** to be tested is in the upper opening **11**, the finger **9** extends in the upper opening **11** between two opposing lateral surfaces **112**, by having the first finger member located largely at the front half portion of the upper opening **11** while the second finger member is located largely at the rear half portion of the upper portion **11**.

The position structure **20** is located at the carrier base **10** at a position respective to the base plane **111** of the upper opening **11**. The position structure **20** is used to assist the PTBV **9** to anchor at a predetermined position at the carrier base **10** in the upper opening **11**.

Referring now to FIG. **4**A and FIG. **4**B, an exploded view of the position structure **20** and the light guide module **50** of the first embodiment of FIG. **1** and a cross-sectional view of FIG. **4**A along line C-C' are shown, respectively. In this embodiment, the position structure **20** embodied as a finger-anchoring structure further includes a front window **21**, a rear window **22** and a position rib **23** between the front window **21** and the rear window **22**. As shown in FIG. **4**B, by having an inter-member valley **93** between the first finger member **91** and the second finger member **92** to fall onto the position rib **23**, the first finger member **91** can be anchored in the front window **21** and the second finger member **92** can be anchored in the rear window **22** includes a front window. At this time, the front lower end of the first finger member **91** would be rested on the front finger-anchoring area **25** of the position structure **20** so as to have the lower surface (having the fingerprint) of the first finger member **91** to contact tightly onto the top surface of the fingerprint-detecting area of the light guide module **50**, and thereby the fingerprint can be captured. Also, the rear lower end of the second finger member **92** would be rested on the rear finger-anchoring area **26** of the position structure **20**, and thus the lower surface of the second finger member **92** would face, but not depress, the vein-detecting area of the light guide module **50** so as to facilitate the capturing process of the vein image. In practice, the front finger-anchoring area **25** is lower than the position rib **23** and the rear finger-anchoring area **26**, such that a non-contact space would be formed between the upper surface of the vein-detecting area and the second finger member **92**. Upon such an arrangement, the plenty area of the vein **921** in the finger can be arranged to be detected, without sacrificing the detection of the fingerprint. In addition, the position structure **20** can have at least one light-shielding plate **24**, a front plate **27** and a rear plate **28**. The light-shielding plate **24** is located between the at least one light source unit **30** and the light guide module **50** and is there to avoid the light to enter the light guide module **50** from areas other than the front and rear windows **21**, **22** of the position structure **20**, and thus substan-

tial improvement upon the over-exposure phenomenon around the finger caused by the environmental lights and the diffractive lights can be obtained. In addition, possibility of the noise lights to enter the light guide module **50** from the front and rear windows **21**, **22** of the position structure **20** can be also reduced. As shown, for the front and rear plates **27**, **28** are to set along the front and rear surfaces of the light guide module **50**, comprehensive positioning help can be obtained while in assembling the light guide module **50** to the position structure **20**, and also a light-shielding effect against the noise light to enter the light guide module **50** via the front and rear surfaces thereof can be achieved.

In the present invention, the at least one light source unit **30** is located inside the carrier base **10** at a position respective the at least one lateral surface **112** of the upper opening **11**. As shown in this embodiment shown in FIG. **1**, FIG. **2**A and FIG. **2**B, a plurality of the light source unit **30** are included at each of the two lateral surfaces **112**. When the PTBV **9** is located at the predetermined position in the upper opening **11**, the light source units **30** are just lined to both lateral sides of the PTBV **9**, and at least one lateral light can be projected onto the PTBV so as to generate at least one image corresponding to the PTBV **9**.

In the present invention, the at least one light source unit **30** includes a plurality of IR-VCSELs, preferably the IR-VCSELs having a wavelength between 780 nm and 850 nm. In this embodiment, the PTBV **9** is at least a portion of the first and second finger members **91**, **92** of the finger **9**. When the PTBV **9** is set at the predetermined position inside the upper opening **11**, the plural IR-VCSELs **30** are lined to a lateral side of the PTBV **9** in a parallel manner; i.e. extending along the direction the same as the first and second finger members **91**, **92** extend. Also, a vertical height h**1** between a mean central point of the at least one light source unit **30** at a perpendicular direction and the base plane **111** of the upper opening **11** is no less than one half of a mean vertical thickness h**2** of the PTBV **9**. For example, the mean vertical thickness h**2** of the second finger member of the index finger for an ordinary adult is ranged between 0.8 cm and 1.6 cm. Accordingly, to produce the biometric authentication device of the present invention suitable almost to all ordinary people, the vertical height h**1** between a mean central point of the at least one light source unit **30** at a perpendicular direction and the base plane **111** of the upper opening **11** is preferably larger than or equal 0.8 cm. By providing the biometric authentication device **1** of the present invention, the VCSELs and/or IR-VCSELs are utilized to obtain more clear images for biometric authentication application by their narrower spectrum (i.e., narrower distribution of the wavelength), so that the later-stage processing upon the images can be benefited therefrom. Namely, with clearer and contrast-enhanced image, many benefits from simplifying the comparison time and hardware processing and from reducing the processing elements, the cost can be reduced. However, for the IR-VCSEL is a high-directional element featured in torch-type illumination, a narrow divergence angle and a narrower optical spectrum, the option of applying the conventional reflective light source to the IR-VCSEL of the present invention would induce local (spots like) over-exposure or uneven exposure.

As described above, the biometric authentication device **1** of the present invention is to arrange the at least one light source unit **30** at a vertical position higher than the PTBV **9** (compared at the horizontal center line **94**). Also, the light projected from the at least one light source unit **30** to the PTBV **9** is a lateral light, not like the overhead light in the art. Upon such an arrangement, conventional shortcomings in exposure such as the aforesaid surface exposure and over-exposure can be greatly reduced.

As shown in FIG. **2**A, the at least one lateral light projected by the at least one light source unit **30** defines a virtual central projection line **301**. The lateral light is deflected and/or reflected by the PTBV **9** to produce a corresponding image response. The image response goes downward into the carrier base **10** along a line defining a virtual vertical projection line **302**, and the angle θ between the virtual central projection line **301** and the virtual vertical projection line **302** is ranged between 30 and 150 degrees. More specifically, when the vertical height h**1** is equal to one half of the mean vertical thickness h**2**, the angle θ is preferably ranged between 30 and 85 degrees. For the at least one light source unit **30** is higher than the horizontal center line of the PTBV **9**, and also for the angle θ is formed between the image response and the vertical direction, following advantages can be obtained: (1) the projection light won't hurt user eyes; (2) the oblique light projection can fit all sizes of the PTBV **9**; and, (3) the arrangement of the light source units can help the lateral light to have a better penetration close to that of a direct penetrating light.

Referring now to FIG. **3**A and FIG. **3**B, two arrangements of the light source unit applicable to the biometric authentication device **1***a* or **1***b* are shown, respectively. In FIG. **3**A, the light source units **30***a* (i.e., IR-VCSELs) for the biometric authentication device **1***a* are mounted at a height substantially equal to the horizontal center line **94** of the PTBV **9**, and the angle θ between the virtual central projection line **301***a* defined by the lateral light projected by the light source unit **30***a* and the virtual vertical projection line **302***a* defined by the at least one image response is ranged between 60 and 85 degrees. In FIG. **3**B, the light source units **30***b* (i.e., IR-VCSELs) for the biometric authentication device **1***b* are mounted at a height higher than the horizontal center line **94** of the PTBV **9**, and the angle θ between the virtual central projection line **301***b* defined by the lateral light projected by the light source unit **30***b* and the virtual vertical projection line **302***b* defined by the at least one image response is ranged between 75 and 105 degrees.

In the present invention, no matter what kind of the arrangement for the light source units is, either of FIG. **2**A, FIG. **3**A and FIG. **3**B, the conventional over-exposure phenomenon upon the applications of the IR-VCSELs on the vein authentication practice can be effectively resolved, by amending the light projection (defined by the virtual central projection line **301**, **301***a* or **301***b*) of the light source unit onto a position higher than the horizontal center line **94** of the finger (PTBV) **9**. Also, by utilizing the internal light scattering of the finger **9**, the vein image can be successfully obtained. The diffraction by the skin of the finger **9** can be blocked by the light-shielding plate **24**. If the VCSEL light source units are to be mounted below the horizontal center line **94**, the light-shield plate **24** would have problems in isolating the surface over-exposure area of the finger **9**. In particular, if the VCSEL light source units are to be mounted right under the horizontal center line **94**, problems in localized spots of over exposure and uneven exposure would become the truth.

Referring now to FIG. **12**A, FIG. **12**B and FIG. **12**C, three typical plots are demonstrated to explain the relationship between the position of the finger and the vein image for applications of the VCSEL as the light source unit. As shown in FIG. **12**A, in the case that the VCSEL light source unit **30***c* is positioned close to the bottom of the finger **9**, the vein image **95***c* would show to have unclear vein lines due to the diffractive lines **951** on the finger surface. As shown in FIG. **12**B, in the case that the VCSEL light source unit **30***d* is

positioned on the horizontal center line **94** of the finger **9** and the light projection to the finger **9** is horizontal, the vein image **95***d* would show also to have unclear vein lines due to major over-exposure areas **952** at both sides of the finger **9**. As shown in FIG. **12**C, in the case that the VCSEL light source unit **30***e* is positioned higher than the horizontal center line **94** of the finger **9**, the vein image **95***e* can then be clear enough to show readable vein lines **954** although minor over-exposure areas **953** do still exist at both sides of the finger **9**. Hence, it is obvious that the arrangement of the light source units **30** in both positions and projection directions in accordance with the present invention can provide a solution to overcome the related disadvantages in the art.

In the present invention, the image-sensing unit **40** is located inside the carrier base **10** and posed by an oblique angle to facing the light guide module **50**. The image-sensing unit **40** can receive the at least one image response of the PTBV **9** and can then thereby generate a detection signal readable to a computer. In the embodiment, the image-sensing unit **40** can further includes a lens set **41**, an image sensor **42**, a sensor circuit board **43** and a filter **44**. The lens set **41** gathers the imaging lights from the light guide module **50** and then further forms corresponding images on the image sensor **42**. The imager sensor **42** can be a CMOS, a CCD or any the like in the art. The sensor circuit board **43** is connecting electrically with the image sensor **42** and the control module **60**. The filter **44** is to filter out the visible lights so as to enhance the identification rate upon some lights with specific wavelengths. In this embodiment, the filter **44** is installed inside to the lens set **41** (between the lens set **41** and the image sensor **42**). Yet, in another embodiment, the filter **44***a* can also be installed outside to the lens set **41** (between the lens set **41** and the light guide module **50**). In addition, the filter **44** can be a long pass filter or a bandpass filter for some specific wavelengths.

As shown in FIG. **2**A, FIG. **2**B, FIG. **4**A and FIG. **4**B, the light guide module **50** is located inside the carrier base **10** at a position under the base plane **111** of the upper opening **11**. Specifically, the light guide module **50** is located right under the position structure **20**. The at least one image response of the PTBV **9** enters downward into the carrier base **10** by penetrating the corresponding windows **21**, **22** of the position structure **20** at the base plane **111** of the upper opening **11**, and the at least one image response is led to the image-sensing unit **40** by the light guide module **50**.

Refers now to FIG. **4**A, FIG. **4**B, FIG. **5**A and FIG. **5**B, in which FIG. **5**A is a perspective view of the light guide module **50** of the first embodiment of the biometric authentication device in accordance with the present invention shown in FIG. **1** and FIG. **5**B is a side view of FIG. **5**A along line D-D'. The light guide module **50** includes at least one prism unit. In the first embodiment shown in FIG. **4**A and FIG. **5**A, the light guide module **50** includes a single prism unit, which is further divided into a fingerprint-detecting area **51** and a vein-detecting area **52**. The fingerprint-detecting area **51** is located at a position corresponding to the front window **21**, while the vein-detecting area **52** is located at a position corresponding to the rear window **22**. When the at least one light source unit **30** projects the lateral light onto the PTBV **9**, a fingerprint image and a vein image corresponding to the PTBV **9** are simultaneously generated. The fingerprint image and the vein image are further guided by the fingerprint-detecting area **51** and the vein-detecting area **52** of the light guide module **50**, respectively, to simultaneously form images on the image-sensing unit **40**. The image-sensing unit **40** then produces the corresponding detection signal readable to a computer and containing messages of the fingerprint image and the vein image. Namely, the single image (or pattern) as the detection signal produced by the image-sensing unit **40** contains simultaneously the fingerprint image and the vein image, and each of the fingerprint image and the vein image occupies almost half area of the single image. For example, the right hand side of the single image shows the fingerprint image, while the left hand side of the single image shows the vein image.

The fingerprint-detecting area **51** of the prism unit of the light guide module **50** further includes a top surface **511**, a bottom surface **512** opposing to the top surface **511**, an imaging surface **513** connecting in-between the top surface **511** and the bottom surface **512**, an anti-reflection surface **514** opposing to the imaging surface **513**, and a lateral anti-reflection surface **514***a* neighboring all the top surface **511**, the bottom surface **512**, the imaging surface **513** and the anti-reflection surface **514**. The top surface **511** is also neighbored to the front window **21** of the position structure **20**. When the PTBV **9** is anchored at the predetermined position in the upper opening **11**, the first finger member **91** of the finger **9** contacts the top surface **511** of the fingerprint-detecting area **51**. The fingerprint image entering the fingerprint-detecting area **51** of the prism unit (the light guide module **50**) via the top surface **511** of the fingerprint-detecting area **51** would be reflected at least once by the bottom surface **512** of the fingerprint-detecting area **51** and then leave the fingerprint-detecting area **51** of the prism unit through the imaging surface **513** of the fingerprint-detecting area **51**. An oblique angle of the imaging surface **513** of the fingerprint-detecting area **51** would help the leaving fingerprint image to form correctly on a corresponding half area of the image-sensing unit **40**. On the anti-reflection surface **514** and the lateral anti-reflection surface **514***a*, an anti-reflection material or a light-absorbing material is thereon plated, sprayed, adhered, coated, or painted so as to reduce the reflection on the anti-reflection surface **514** and the lateral anti-reflection surface **514***a* while lights in the fingerprint-detecting area **51** are projected onto the anti-reflection surface **514** and the lateral anti-reflection surface **514***a*. Upon such an arrangement, the internal total reflection phenomenon that would degrade the imaging of the fingerprints can be substantially reduced.

The vein-detecting area **52** of the prism unit of the light guide module **50** further includes thereof a corresponding top surface **521**, a corresponding bottom surface **522** opposing to the top surface **521**, a corresponding imaging surface **523** connecting in-between the top surface **521** and the bottom surface **522**, and a reflection surface **524** opposing to the imaging surface **523** and connecting obliquely the bottom surface **522**. The top surface **521** of the vein-detecting area **52** is neighbored to the rear window **22** of the position structure **20**. When the PTBV **9** is anchored at the predetermined position in the upper opening **11**, the second finger member **92** of the finger **9** is located above the top surface **521** of the vein-detecting area **52** in a manner of having no contact in between. The vein image entering the vein-detecting area **52** of the prism unit (the light guide module **50**) via the top surface **521** of the vein-detecting area **52** would be reflected at least once individually by the reflection surface **524**, the top surface **521** and the bottom surface **522** of the vein-detecting area **52** and then leave the prism unit (the light guide module **50**) through the imaging surface **523** of the vein-detecting area **52**. An oblique angle of the imaging surface **523** of the vein-detecting area **52** would help the leaving vein image to form on another half area of the image-sensing unit **40**. On the reflection surface **524** of the vein-detecting area **52**, a mirror may be adhered thereon, or a material with a high reflective index can be thereon plated, sprayed, adhered, coated, or painted so as to reflect the light of the vein image and so as to form an

internal total reflection inside the prism unit (the light guide module **50**). The imaging optical path of the vein image is dependent on a vertical height between the top surface **521** and the bottom surface **522** of the vein-detecting area **52** and a reflection frequency of the vein image inside the vein-detecting area **52**, in which the reflection frequency is determined by the oblique angle between the reflection surface **524** and the bottom surface **522** of the vein-detecting area **52**.

As shown in FIG. **5**B, it is noted that a height difference h**5** exists between two top surfaces **511** and **521** of the fingerprint-detecting area **51** and the vein-detecting area **52**. The height difference h**5** is accounted to the optical path and is also there to enlarge the non-contact area under the second finger member **92** and thus able to enhance the identification of the vein lines with the help of the finger position rib **23** and the rear finger-anchoring area **26**. Further, it is also noted that another height difference h**6** exists between two bottom surfaces **512** and **522** of the fingerprint-detecting area **51** and the vein-detecting area **52**. The height difference h**6** determines the thickness difference of the prism unit (the light guide module **50**) between the fingerprint-detecting area **51** and the vein-detecting area **52**, and importantly is the key to determine if the fingerprint image and the vein image can be finally integrated as a unique signal.

As shown in FIG. **4**A and FIG. **4**B, for the prism unit (the light guide module **50**) is located beneath the position structure **20**, the workable detection range is smaller than the upper surface of the prism. Further, portion of the upper surface of the prism is shadowed by the light-shielding plate **24**. The front finger-anchoring area **25** is defined on the position structure **20** in front of the fingerprint-detecting area **51**, and is flush with the fingerprint-detecting area **51** of the prism unit (light guide module **50**) so as thereby to provide a broader space for resting the finger. The rear finger-anchoring area **26** is defined on the position structure **20** at a position rear to the vein-detecting area **52**, and is flush with the top surface **521** of the vein-detecting area **52** of the prism unit (light guide module **50**) and the position rib **23**. When the finger **9** is anchored in the upper opening **11**, a non-contact area can be formed between the rear finger-anchoring area **26** and the position rib **28**, and is there to prevent the second finger member **92** from any depression to distort the vein lines inside the second finger member **92**.

Referring now to FIG. **6**A, FIG. **6**B and FIG. **6**C, a top view of an effective detection area above the prism unit of the light guide **50** of FIG. **1**, the optical path in the fingerprint-detecting area **51** of the prism unit of FIG. **6**A, and the optical path in the vein-detecting area **52** of the prism unit of FIG. **6**A are shown, respectively. For the light-shielding plate **24** blocks a portion of the space above the prism unit (the light guide module **50**), the practical detection area of the device is smaller than the upper surface of the prism unit (the light guide module **50**). The major difference in optical path between the fingerprint-detecting area **51** and the vein-detecting area **52** is that the optical path of the fingerprint image undergoes only one total reflection by the bottom surface **512** of the fingerprint-detecting area **51** inside the fingerprint-detecting area **51** before the fingerprint image goes to the image-sensing unit **40**, while the optical path of the vein image undergoes subsequent reflections, one by the reflection surface **524**, one by the top surface **521** and one by the bottom surface **522** (totally 3 reflections), inside the vein-detecting area **52** before the vein image goes to the image-sensing unit **40**. Apparently, lengths of the optical paths for the fingerprint image and the vein image are not identical. This is because the target to be detected (i.e., the fingerprint) in the fingerprint-detecting area **51** is located under the lower surface of the finger **9**, while the target to be detected (i.e., the vein) in the vein-detecting area **52** is located inside the finger **9**. Therefore, the optical path inside the vein-detecting area **52** is longer than that inside the fingerprint-detecting area **51**. The thickness difference h**6** at the bottom planes is to account for adjusting the final imaging position of the fingerprint and the vein images.

Referring now to FIG. **7**A and FIG. **7**B, another embodiment of the light guide module **50***a* for the biometric authentication device in accordance with the present invention is shown in a perspective view and an exploded view, respectively. In this embodiment, the light guide module **50***a* further includes a prism unit (the prism unit as described above), a mirror **56** and a mirror base **57** for mounting the mirror **56**. The prism unit is to form the fingerprint-detecting area **50***a*, while the mirror **56** is to form the vein-detecting area. The prism unit (the fingerprint-detecting area **51***a*) located under the front window **21** of the position structure is mounted on a platform **572** of the mirror base **57**. The mirror **56** is installed to an oblique surface **571** of the mirror base **57**. A flat surface **573** is extended horizontally from and connects the oblique surface **56** at the side close to the image-sensing unit **40**. By providing the reflection mirror **56** to the biometric authentication device for capturing the fingerprint image and the vein image simultaneously, the advantage of a simplified design without further consideration on different optical paths corresponding to plural prism units can be achieved in. However, in this embodiment, the adopting of the single prism unit to pair the corresponding mirror so as to form a reduced structured light guide module would pay as a tradeoff in a larger occupied volume and a lengthy optical path.

As shown in FIG. **8**, optical paths for the light guide module **50***a* of FIG. **7**A are schematically shown. The angle θ**2** of the mirror **56** is ½ of the oblique angle θ**1** of the imaging surface of the prism unit (the fingerprint-detecting area **51***a*); i.e. θ**1**=2θ**2**. The height h**7** +h**8** is defined as the total height measured from the top of the flat surface **573** of the mirror base **57** to the tip of the fingerprint-detecting area **51***a* of the prism unit, in which h**7** is the thickness of the fingerprint-detecting area **51***a* and h**8** is the distance between the top of the flat surface **573** and the top of the platform **57**. It is noted that h**8** might not be equal to the elevation height of the mirror **56**. In the present invention, the ratio of h**7** to h**8** is 0.67 (i.e. h**7**:h**8**=**2**:**3**). The elevation height of the mirror **56** is determined by the angle θ**2** and the distance w**1** measured horizontally from the lower end of the mirror **56** to the lower end of the imaging surface of the prism unit (the fingerprint-detecting area **51***a*); i.e. the width of the flat surface **573**. Preferably, w**1** is equal to h**7**. In the case that the lateral light projects through the finger **9** at a specific angle, the penetrating light would be reflected by the mirror **56**, and then to leave the carrier base from the fingerprint-detecting area **51***a* of the prism unit. Apparently, in this embodiment, the adopting of the mirror to totally reflect all the incoming rays can also form the biometric authentication device and also can perform the image-capturing process.

Referred now to FIG. **9**A and FIG. **9**B, an application of the biometric authentication device of FIG. **1** to a security system and a block diagram of a first embodiment of the control module for the biometric authentication device of the present invention are shown, respectively. In this application, the control module **60** of the biometric authentication device **1** connects electrically at least with the at least one light source unit **30** and the image-sensing unit **40**. The control module **60** is to control the illumination of the light source unit **30** and is to receive the detection signal from the image-sensing unit **40**, in which the detection signal includes simultaneously both

the fingerprint image and the vein image. The detection signal is processed in advance before it is sent to an authentication module **70** for signal effective comparison. In the present invention, the authentication module **70** can be a built-in module or a foreign module for a system that requires security protection. In this application, the authentication module **70** can be connected with a computer apparatus **971**, a door-alarm apparatus **972**, a financial transaction apparatus **973** (a teller machine for example), or any the like. Also, the authentication module **70** can be built inside the biometric authentication device so as to form a compact and portable biometric authentication device with the authentication module **70**. The biometric authentication device can be a wireless device or a cabled device, both of which can be connect with a portable electronic information apparatus such as a notebook computer, a tabular computer, a smart phone, and so on.

As shown in FIG. **9**B, the control module **60** further includes a detecting element **61**, a controller **62**, an image-processing unit **63** and a power module **64**. The detecting element **61** is to detect if or not the PTBV **9** is in the upper opening **11**. For various candidate parts already in the marketplace (such as photo detectors, touch switches, pressure sensor, and so on) can be introduced to act as the detecting element **61** of the present invention and for this detecting element **61** is not one of the major features of the present invention, details thereabout are omitted herein. The controller **62** connecting electrically with the detecting element **61** is to determine the at least one light source unit **30** to project the at least one lateral light according to a detection of the detecting element **61**. The image-processing unit **63** connecting electrically with the image-sensing unit **40** and the controller **62** is to receive the detection signal from the image-sensing unit **40** and to further perform a pre-management **631** and a feature-capturing management **632**. The power module **64** is to provide electricity to energize the biometric authentication device. In the present invention, the pre-management **631** is to perform de-noise and image-rounding processes upon the detection signal, and the feature-capturing management **632** is to extract a fingerprint feature data and a vein feature data from the fingerprint image and the vein image of the detection signal.

In the present invention, the authentication module **70** is connecting electrically with the control module **60**. In the first application embodiment as shown in FIG. **9**A and FIG. **9**B, the authentication module **70** is located exteriorly to the carrier base **10** of the device **1**, and is communicated, either wirelessly or by cables, with an I/O interface **65** of the control module **60**. The I/O interface **65** is also connected electrically with the controller **62** and the image-processing unit **63**. However, in another embodiment not shown in the figure, the authentication module **70** can also be directly built inside the device **1** and connected electrically with the image-processing unit **63** without detouring to the I/O interface **65**.

In the present invention, the authentication module **70** further includes a user interface **71**, a feature database **72** and an authentication unit **73**. The user interface **71** for login a user. The feature database **72** is to pre-store at least the fingerprint feature data and the vein feature data of the user. The authentication unit **73** is to compare the fingerprint feature data and the vein feature data received from the image-processing unit **63** of the control module **60** with the fingerprint feature data and the vein feature data pre-stored in the feature database **72** so as to generate a comparison result for outputting to the user interface **71** (see block **74**). In the case that the fingerprint feature data and the vein feature data of the image-processing unit **63** are forwarded to the feature database **72**, a login process is performed. At this time, an allowable signal will be issued to the I/O interface **65** and then the prospective login is accepted. On the other hand, in the case that the fingerprint feature data and the vein feature data of the image-processing unit **63** are forwarded to the authentication unit **73**, a comparing process is performed. The authentication unit **73** will perform the comparison between the incoming data and the pre-stored data and then generate a comparison result. The comparison result will be forwarded to the user interface **71** (see also block **74**) to make known the comparison result.

In FIG. **9**B, a foreign authentication module **70** is shown to help an identification process upon the testing in the device **1**. Yet, in FIG. **9**C, the authentication module **70** is directly constructed inside the biometric authentication device **1** so as to perform the identification inside the device **1**. Upon such an arrangement, the biometric authentication device **1** can be formed as a portable and systematic-modulated biometric authentication device.

As shown in FIG. **9**C, the systematic biometric authentication device **1** can also include the same carrier base **10**, the same position structure **20**, the same light source unit **30**, the same image-sensing unit **40** and the same light guide module **50**, as the embodiment described above. The only difference between this embodiment and the previous embodiment is only at the internal structuring of the control module **60***a* and the human-machine interface **700**. As shown in FIG. **9**C, the control module **60***a* includes a detecting unit **61**, a micro-controller (MCU) **62***a*, an image-processing unit (DSP) **63***a*, a power module **64** and a memory unit **66**. The human-machine interface **700** further includes an I/O interface **701**, a user interface **702**, a mechanism for user login **703**, a mechanism for verifying user **704** and a starter **705**. In the control module **60***a*, the micro-controller **62***a* is to communicate with the human-machine interface **700** and to coordinate all the operation of the internal elements. When the login process **703** is performed, the user interface **702** would send a signal to tell the micro-controller **62***a* via the dual I/O interface **701** that a login process needs to be executed. Then, the micro-controller **62***a* would initiate the image-sensing unit **40** and the light source unit **30** and send another signal back to the user interface **702** to acknowledge the user to initiate the login process by performing three times of image capturing process. The detecting element **61** is introduced to judge if three times of the image-capturing process have been performed. The image-sensing unit **40** forwards the captured images back to be temporarily stored in the register **661** of the memory unit **66**. Then, the register **661** would forward the images to the image-processing unit **63***a* for performing the image-processing. When the feature images arrive the image-processing unit **63***a*, the pre-management **631** would be performed thereon to amend the images so as to have the contours inside the images easy to be identified. Thereafter, the feature-capturing management **632** is performed to obtain a result containing the fingerprint feature data and the vein feature data. The result is then forwarded to the memory unit **66** and to be stored in the feature database **662**. Also, at the same time, the micro-controller **62***a* is requested to issue a message to the user interface **702** to let known that the establishment of the user featured data is complete. At this time, the characteristic/feature forwarding routine of the present invention is fulfilled.

The feature authentication routine is performed as follows. When the user places his/her finger **9** into the detection area and the detecting element **61** gets a positive detection, the detecting element **61** would issue a signal to the micro-controller **62***a*. The micro-controller **62***a* would then send a corresponding signal to initiate the light source unit **30** and the image-sensing unit **40** to perform image-capturing. After the

image-sensing unit **40** forwards the captured image data to the register **661** of the memory unit **66**, the pre-management **631** of the image-processing unit **63***a* would retrieve data inside the register **661** so as to begin the image-processing. The feature-capturing management **632** is then performed to process the data forwarded from the pre-management **631**, and the result in the feature-capturing management **632** would be forwarded to the authentication unit **633**. The authentication unit **633** would compare the data (including the fingerprint feature data and the vein feature data) from the feature-capturing management **632** with the corresponding pre-stored data in the feature database **662**, in which the feature database **662** can pre-store at least one the fingerprint feature data and the vein feature data of at least one user. The comparison result of the authentication unit **633** would be forwarded to the determination unit **634** for the determination unit **634** to decide if the user is a correct user. The decision result in the determination unit **634** would be forwarded to the micro-controller **62***a*. In the case that the micro-controller **62***a* gets a wrong message from the determination unit **634**, a corresponding message would be issued to the user interface **702** to tell the user that his/her identification fails and a renewal might be needed. In the case that the micro-controller **62***a* gets a correct message from the determination unit **634**, a corresponding correct message would be also issued to the user interface **702** and, at the same time, another signal is generated and forwarded to the starter **705** to allow the user accessible to the system.

Referring now to FIG. **10**, a simplified flowchart to demonstrate the biometric authentication method in accordance with the present invention is shown. In step S**11**, the prism unit (the light guide module **50**) and the image-sensing unit **40** are cooperatively used to capture the fingerprint image and the vein image which are combined in one single image. Then, in step S**12**, the image-sensing unit **40** forwards the aforesaid image to the image-processing unit **63**. In step S**13**, the image-processing unit **63** performs the feature-capturing management **632** to generate the corresponding fingerprint/vein feature data. In step S**14**, the corresponding fingerprint/vein feature data is sent to the feature database **72** and the authentication unit **73** of the authentication module **70** for performing feature matching comparison process so as thereby to verify if the user is correct (as shown in step S**15**).

Referring now to FIG. **11**A and FIG. **11**B, typical applications of the biometric authentication method of the present invention to a mean/low security need environment and a high security need environment are shown, respectively. It is noted that the biometric authentication device of the present invention can process a single-function authentication and/or a multiple-function authentication. In the case that the biometric authentication device of the present invention is chosen to perform a single-function authentication (S**21**) as shown in the example of FIG. **11**A for a mean/low security need environment, a correct result of the authentication (S**25**) can be obtained upon either one of the comparisons, the fingerprint (S**22**) or the vein (S**23**), is met (S**24**). For example, in the plot of FIG. **11**A, the fingerprint comparison (S**22**) is matched, but the vein comparison (S**23**) fails. However, even the vein matching is failed in S**23**, the authentication result in S**25** is still correct. Apparently, such an authentication process meets popular needs, in particular well for the environment that some users might have problems in demonstrating clear fingerprints for some inevitable reasons. In this circumstance, the vein authentication can be more suitable. Nevertheless, both the fingerprint and the vein feature data of all the qualified users are recommended to be pre-stored in the memory unit of the biometric authentication device. On the other hand, if a dual biometric authentication device is chosen to perform the authentication (S**31**) as shown in FIG. **11**B for a high security need environment, a positive result of the authentication (S**35**) can be obtained only upon both the comparisons, the fingerprint (S**32**) and the vein (S**33**), are simultaneously met (S**34**). Such an application environment may include the financial and the research institutes.

Further, the biometric authentication method in accordance with the present invention is to verify at least a biometric authentication on a portion of a creature (portion-to-be-verified or PTBV, thereinafter) and comprises the steps of:

providing a biometric authentication device, the biometric authentication device comprising: a carrier base, at least one light source unit, an image-sensing unit and a control module; the carrier base being used to receive the PTBV, the at least one light source unit being to project a light onto the PTBV so as to generate a fingerprint image and a vein image corresponding to the PTBV, the image-sensing unit being to receive the fingerprint image and the vein image and thereby further to generate a detection signal readable to a computer; wherein the detection signal includes simultaneously messages of the fingerprint image and the vein image; wherein the control module connecting electrically at least with the at least one light source unit and the image-sensing unit is to receive the detection signal from the image-sensing unit;

arranging the PTBV to the biometric authentication device so as thereby to generate simultaneously the detection signal including the messages of the fingerprint image and the vein image;

the control module of the biometric authentication device receiving the detection signal and further extracting thereinside a fingerprint feature data from the fingerprint image and a vein feature data from the vein image; and

applying a authentication unit to compare the fingerprint feature data and the vein feature data received from the image-sensing unit of the control module with the fingerprint feature data and the vein feature data pre-stored in the feature database so as to generate a comparison result.

In accordance with the present invention, the biometric authentication device **1** able to identify the fingerprint and the vein feature simultaneously includes mainly at least one light source unit **30**, a prism unit (light guide module **50**), a position structure **20**, an image-sensing unit **40** and a control module **60**. The user for the device **1** must firstly perform a login process to connect the user interface for determining the user options. Internally, the device **1** would acknowledge the feature database **72** to establish a user's feature data, and at the same time, the user is asked to place his/her finger **9** into the device **1**. While in the login process, the finger **9** is needed to stay in the device with the inter-member valley **93** between the first finger member **91** and the second finger member **92** to anchor upon the position rib **23** in the middle of the position structure **20**. Also, the front end of the first finger member **91** is to contact tightly at the top surface **511** of the fingerprint-detecting area **51** of the prism unit (light guide module **50**), while the rear end of second finger member **92** is to be located in the rear finger-anchoring area **26**. Then, the detecting element **61** would sense the finger **9** and notify the controller **62** the existence of the finger **9** so as to activate the light source unit **30** and the image-sensing unit **40**. The image-sensing unit **40** would perform the imaging exposure control according to its firmware settings, in which the exposure control is obtained by controlling the shutter speed. Through the foregoing exposure control, relevant image exposure can be better achieved even upon facing users with different finger thicknesses. The captured images would be forwarded to the image-processing unit **63** for performing pre-management

631 so as to make clear the contours in the fingerprint and the vein images. After the pre-management 631, the amended images are then forwarded to the feature-capturing management 632 for performing the extracting of the required biometric. The extracted feature data are then compared with the corresponding feature data pre-stored in the feature database 72. The comparison result is finally outputted to the user interface 71. One merit of the device 1 in accordance with the present invention is that the security levels can be variously selected according to the practical needs. While in a mean/low security need circumstance, the correct authentication result can be obtained by matching any single one of the feature, the fingerprint or the vein. Such a circumstance can be found in a door-alarm system for plenty of the qualified users might have problems to provide a clean finger. On the other hand, if an application environment needs higher security control, the correct authentication result can be obtained only by matching both two features, the fingerprint and the vein. Such an application can avoid loss from a piracy feature data and can be seen in most of the financial units and the classified districts.

While the present invention has been particularly shown and described with reference to a preferred embodiment, it will be understood by those skilled in the art that various changes in form and detail may be without departing from the spirit and scope of the present invention.

What is claimed is:

1. A biometric authentication device, for authenticating at least a biometric on a portion of a creature (portion-to-be-verified or PTBV, thereinafter), comprising:

a carrier base, having an upper opening for receiving the PTBV, which the upper opening further has a base plane and at least one lateral surface;

a position structure, located at the carrier base at a position respective to the upper opening, being used to assist the PTBV to anchor at a predetermined position at the carrier base in the upper opening;

at least one light source unit, located at the at least one lateral surface of the carrier base respective to the upper opening; in the case that the PTBV reaches the predetermined position, the at least one light source unit being positioned laterally to the PTBV, and the at least one light source unit being able to project at least one lateral light onto the PTBV so as to generate and at least one corresponding image response;

an image-sensing unit, located inside the carrier base to receive the at least one image response and further to form thereby a corresponding detection signal readable to a computer; and

a light guide module and a filter, the light guide module being located inside the carrier base at a position under the base plane respective to the upper opening, the at least one image response entering the carrier base through the bottom portion of the upper opening and being further projected onto the image-sensing unit by the light guide module, the filter being located at one of an inside of the image-sensing unit and an outside of the image-sensing unit for filtering out visible lights so as to enhance a identification rate of a particular wavelength;

wherein:

the at least one light source unit further includes a plurality of Infra-red Vertical-cavity Surface-emitting Lasers (IR-VCSELs), and a vertical height h1 between a mean central point of the at least one light source unit at a perpendicular direction and the base plane of the upper opening is no less than one half of a mean vertical thickness h2 of the PTBV;

the PTBV is at least a portion of a first finger member and a second finger member of a finger, the plurality of IR-VCSELs is located at a lateral side of the PTBV along a direction extended from the first finger member to the second finger member;

the position structure formed as a finger-anchoring structure located on the base plane further includes a front window, a rear window and a position rib between the front window and the rear window; while an inter-member valley between the first finger member and the second finger member falls onto the position rib, the first finger member is anchored in the front window and the second finger member is anchored in the rear window,

the light guide module having at least one prism unit is separated into a fingerprint-detecting area respective to the front window and a vein-detecting area respective to the rear window;

when the at least one lateral light projects on the PTBV, a fingerprint image and a vein image being formed simultaneously on the image-sensing unit through the fingerprint-detecting area and the vein-detecting area of the light guide module, respectively, the image-sensing unit then generating the detection signal readable to the computer and having messages of the fingerprint image and the vein image;

the light guide module has one single prism unit separated into the fingerprint-detecting area and the vein-detecting area;

the fingerprint-detecting area of the prism unit further includes thereof a top surface, a bottom surface opposing to the top surface, an imaging surface connecting in-between the top surface and the bottom surface, and an anti-reflection surface opposing to the imaging surface, the top surface being neighbored to the front window of the position structure;

when the PTBV is anchored at the predetermined position in the upper opening, the first finger member of the finger contacting the top surface of the fingerprint-detecting area, the fingerprint image entering the fingerprint-detecting area of the prism unit via the top surface of the fingerprint-detecting area, the fingerprint image being reflected at least once by the bottom surface of the fingerprint-detecting area and then leaving the prism unit through the imaging surface of the fingerprint-detecting area, an oblique angle of the imaging surface of the fingerprint-detecting area helping the leaving fingerprint image to form on the image-sensinq unit, the anti-reflection surface being there to reduce the reflection while lights in the fingerprint-detecting area are projected onto the anti-reflection surface; and

the vein-detectinq area of the prism unit further includes thereof another top surface, another bottom surface opposing to the another top surface, another imaging surface connecting in-between the another top surface and the another bottom surface, and an reflection surface opposing to the another imaging surface and connecting obliquely the another bottom surface; the top surface of the vein-detecting area being neighbored to the rear window of the position structure; when the PTBV is anchored at the predetermined position in the upper opening, the second finger member of the finger being above the top surface of the vein-detecting area without any contact in between, the vein image entering the vein-detecting area of the prism unit via the top surface of the vein-detectinq area, the vein image being reflected at least once individually by the reflection surface, the top surface and the bottom surface of the vein-detecting

area and then leaving the prism unit through the imaging surface of the vein-detecting area, an oblique angle of the imaging surface of the vein-detecting area helping the leaving vein image to form on the image-sensing unit; an imaging optical path of the vein image being dependent on a vertical height between the top surface and the bottom surface of the vein-detecting area and a reflection frequency of the vein image inside the vein-detecting area, in which the reflection frequency is determined by the oblique angle between the reflection surface and the bottom surface of the vein-detecting area.

2. The biometric authentication device according to claim **1**, wherein the at least one lateral light projected by the at least one light source unit defines a virtual central projection line, a projection direction of the at least one image response downward into the carrier base defines a virtual vertical projection line, and the angle θ between the virtual central projection line and the virtual vertical projection line is ranged between 30 and 150 degrees.

3. The biometric authentication device according to claim **2**, wherein the angle θ is ranged between 30 and 85 degrees when the vertical height h**1** is equal to one half of the mean vertical thickness h**2**, and the angle θ is ranged between 30 and 150 degrees when the vertical height h**1** is larger than one half of the mean vertical thickness h**2**.

4. The biometric authentication device according to claim **1**, further including a light-shielding plate located at the position structure and a control module connecting electrically at least with the at least one light source unit and the image-sensing unit, the control module further including:

a detecting element for detecting if or not the PTBV is in the upper opening;

a controller, connecting electrically the detecting element, for determining the at least one light source unit to project the at least one lateral light according to a detection of the detecting element; and

an image-processing unit, connecting electrically the image-sensing unit and the controller, for performing a pre-management and a feature-capturing management while receiving the detection signal from the image-sensing unit;

wherein the pre-management is to perform de-noise and image optimization processes upon the detection signal, and the feature-capturing management is to extract a fingerprint feature data and a vein feature data from the fingerprint image and the vein image of the detection signal.

5. A biometric authentication device, for verifying at least a biometric on a portion of a creature (portion-to-be-verified or PTBV, thereinafter), comprising:

a carrier base, having an upper opening for receiving the PTBV, which the upper opening further has a base plane and at least one lateral surface;

a position structure, located at the carrier base at a position respective to the upper opening, being used to assist the PTBV to anchor at a predetermined position at the carrier base in the upper opening;

at least one light source unit, located at the at least one lateral surface of the carrier base respective to the upper opening; in the case that the PTBV reaches the predetermined position, the at least one light source unit being positioned laterally to the PTBV, and the at least one light source unit being able to project at least one lateral light onto the PTBV so as to generate and at least one corresponding image response;

a light guide module, located inside the carrier base at a position under the base plane respective to the upper opening; and

an image-sensing unit, located inside the carrier base to receive the at least one image response and further to form thereby a corresponding detection signal readable to a computer; the at least one image response of the PTBV entering the carrier base through the base plane of the upper opening and being further to be projected onto the image-sensing unit via the light guide module;

wherein the light guide module further includes at least one prism unit and is separated into a fingerprint-detecting area and a vein-detecting area; a fingerprint image and a vein image corresponding to the PTBV being formed by projecting the at least one lateral light of the at least one light source onto the PTBV, the fingerprint image being formed on the image-sensing unit through the fingerprint-detecting area of the light guide module, the vein image being formed on the image-sensing unit through the vein-detecting area of the light guide module;

wherein:

when the at least one lateral light projects on the PTBV, the fingerprint image and the vein image are formed simultaneously on the image-sensing unit through the fingerprint-detecting area and the vein-detecting area of the light guide module, respectively, and then the image-sensing unit generates the detection signal readable to the computer and having messages of the fingerprint image and the vein image;

the PTBV is at least a portion of a first finger member and a second finger member of a finger;

the position structure formed as a finger-anchoring structure located on the base plane further includes a front window, a rear window and a position rib between the front window and the rear window; while an inter-member valley between the first finger member and the second finger member falls onto the position rib, the first finger member is anchored in the front window and the second finger member is anchored in the rear window;

the fingerprint-detecting area is respective to the front window and the vein-detecting area is respective to the rear window

the light guide module has one single prism unit separated into the fingerprint-detecting area and the vein-detecting area;

the fingerprint-detecting area of the prism unit further includes thereof a top surface, a bottom surface opposing to the top surface, an imaging surface connecting in-between the top surface and the bottom surface, and an anti-reflection surface opposing to the imaging surface, the top surface being neighbored to the front window of the position structure;

when the PTBV is anchored at the predetermined position in the upper opening, the first finger member of the finger contacting the top surface of the fingerprint-detecting area, the fingerprint image entering the fingerprint-detecting area of the prism unit via the top surface of the fingerprint-detecting area, the fingerprint image being reflected at least once by the bottom surface of the fingerprint-detecting area and then leaving the prism unit through the imaging surface of the fingerprint-detecting area, an oblique angle of the imaging surface of the fingerprint-detecting area helping the leaving fingerprint image to form on the image-sensing unit, the anti-reflection surface being there to reduce the reflection while lights in the fingerprint-detecting area are projected onto the anti-reflection surface; and the vein-

detecting area of the prism unit further includes thereof another top surface, another bottom surface opposing to the another top surface, another imaging surface connecting in-between the another top surface and the another bottom surface, and an reflection surface opposing to the another imaging surface and connecting obliquely the another bottom surface; the top surface of the vein-detecting area being neighbored to the rear window of the position structure; when the PTBV is anchored at the predetermined position in the upper opening the second finger member of the finger being above the top surface of the vein-detecting area without any contact in between, the vein image entering the vein-detecting area of the prism unit via the top surface of the vein-detecting area, the vein image being reflected at least once individually by the reflection surface, the top surface and the bottom surface of the vein-detecting area and then leaving the prism unit through the imaging surface of the vein-detecting area, an oblique angle of the imaging surface of the vein-detecting area helping the leaving vein image to form on the image-sensing unit; an imaging optical path of the vein image being dependent on a vertical height between the top surface and the bottom surface of the vein-detecting area and a reflection frequency of the vein image inside the vein-detecting area, in which the reflection frequency is determined by the oblique angle between the reflection surface and the bottom surface of the vein-detecting area.

6. The biometric authentication device according to claim **5**, wherein the at least one light source unit further includes a plurality of Infra-red Vertical-cavity Surface-emitting Lasers (IR-VCSELs), and a vertical height h**1** between a mean central point of the at least one light source unit at a perpendicular direction and the base plane of the upper opening is no less than one half of a mean vertical thickness h**2** of the PTBV.

7. The biometric authentication device according to claim **6**, wherein the at least one lateral light projected by the at least one light source unit defines a virtual central projection line, a projection direction of the at least one image response downward into the carrier base defines a virtual vertical projection line, and the angle θ between the virtual central projection line and the virtual vertical projection line is ranged between 30 and 150 degrees.

8. The biometric authentication device according to claim **5**, further including a light-shielding plate located at the position structure and a control module connecting electrically at least with the at least one light source unit and the image-sensing unit, the control module further including:

a detecting element for detecting if or not the PTBV is in the upper opening;

a controller, connecting electrically the detecting element, for determining the at least one light source unit to project the at least one lateral light according-to a detection of the detecting element; and

an image-processing unit, connecting electrically the image-sensing unit and the controller, for performing a pre-management and a feature-capturing management while receiving the detection signal from the image-processing unit;

wherein the pre-management is to perform de-noise and image optimization processes upon the detection signal, and the feature-capturing management is to extract a fingerprint feature data and a vein feature data from the fingerprint image and the vein image of the detection signal.

9. A biometric authentication device, for verifying at least a biometric on a portion of a creature (portion-to-be-verified or PTBV, thereinafter), comprising:

a carrier base, having an upper opening for receiving the PTBV, which the upper opening further has a base plane and at least one lateral surface;

a position structure, located at the carrier base at a position respective to the upper opening, being used to assist the PTBV to anchor at a predetermined position at the carrier base in the upper opening;

at least one light source unit, located at the at least one lateral surface of the carrier base respective to the upper opening; in the case that the PTBV reaches the predetermined position, the at least one light source unit being positioned laterally to the PTBV, and the at least one light source unit being able to project at least one lateral light onto the PTBV so as to generate and at least one corresponding image response;

an image-sensing unit, located inside the carrier base to receive the at least one image response and further to form thereby a corresponding detection signal readable to a computer; the at least one image response of the PTBV entering the carrier base through the base plane of the upper opening and being further to be projected onto the image-sensing unit via a light guide module;

a control module, connecting electrically at least with the at least one light source unit and the image-sensing unit;

wherein:

when the at least one lateral light projects on the PTBV, a fingerprint image and a vein image are formed simultaneously on the image-sensing unit through a fingerprint-detecting area and a vein-detecting area of the light guide module, respectively; and then the image-sensing unit generates the detection signal readable to the computer and having messages of the fingerprint image and the vein image;

the light guide module being located inside the carrier base at a position under the base plane respective to the upper opening; the light guide module further includes at least one prism unit and is separated into the fingerprint-detecting area and the vein-detecting area; the PTBV is at least a portion of a first finger member and a second finger member of a finger;

the position structure formed as a finger-anchoring structure located on the base plane further includes a front window, a rear window and a position rib between the front window and the rear window; while an inter-member valley between the first finger member and the second finger member falls onto the position rib, the first finger member is anchored in the front window and the second finger member is anchored in the rear window;

the fingerprint-detecting area is respective to the front window and the vein-detecting area is respective to the rear window;

the light guide module has one single prism unit separated into the fingerprint-detecting area and the vein-detecting area;

the fingerprint-detecting area of the prism unit further includes thereof a top surface, a bottom surface opposing to the top surface, an imaging surface connecting in-between the top surface and the bottom surface, and an anti-reflection surface opposing to the imaging surface, the top surface being neighbored to the front window of the position structure;

when the PTBV is anchored at the predetermined position in the upper opening, the first finger member of the finger contacting the top surface of the fingerprint-de-

tecting area, the fingerprint image entering the fingerprint-detecting area of the prism unit via the top surface of the fingerprint-detecting area, the fingerprint image being reflected at least once by the bottom surface of the fingerprint-detecting area and then leaving the prism unit through the imaging surface of the fingerprint-detecting area, an oblique angle of the imaging surface of the fingerprint-detecting area helping the leaving fingerprint image to form on the image-sensing unit, the anti-reflection surface being there to reduce the reflection while lights in the fingerprint-detecting area are projected onto the anti-reflection surface; and

the vein-detecting area of the prism unit further includes thereof another top surface, another bottom surface opposing to the another top surface, another imaging surface connecting in-between the another top surface and the another bottom surface, and an reflection surface opposing to the another imaging surface and connecting obliquely the another bottom surface; the top surface of the vein-detecting area being neighbored to the rear window of the position structure; when the PTBV is anchored at the predetermined position in the upper opening, the second finger member of the finger being above the top surface of the vein-detecting area without any contact in between, the vein image entering the vein-detecting area of the prism unit via the top surface of the vein-detecting area, the vein image being reflected at least once individually by the reflection surface, the top surface and the bottom surface of the vein-detecting area and then leaving the prism unit through the imaging surface of the vein-detecting area, an oblique angle of the imaging surface of the vein-detecting area helping the leaving vein image to form on the image-sensing unit; an imaging optical path of the vein image being dependent on a vertical height between the top surface and the bottom surface of the vein-detecting area and a reflection frequency of the vein image inside the vein-detecting area, in which the reflection frequency is determined by the oblique angle between the reflection surface and the bottom surface of the vein-detecting area.

10. The biometric authentication device according to claim **9**, wherein the at least one light source unit further includes a plurality of Infra-red Vertical-cavity Surface-emitting Lasers (IR-VCSELs), and a vertical height h**1** between a mean central point of the at least one light source unit at a perpendicular direction and the base plane of the upper opening is no less than one half of a mean vertical thickness h**2** of the PTBV.

11. The biometric authentication device according to claim **10**, wherein the at least one lateral light projected by the at least one light source unit defines a virtual central projection line, a projection direction of the at least one image response downward into the carrier base defines a virtual vertical projection line, and the angle θ between the virtual central projection line and the virtual vertical projection line is ranged between 30 and 150 degrees.

12. The biometric authentication device according to claim **9**, further including a light-shielding plate located at the position structure.

13. The biometric authentication device according to claim **9**, wherein the control module further including:

a detecting element for detecting if or not.the PTBV is in the upper opening;

a controller, connecting electrically the detecting element, for determining the at least one light source unit to project the at least one lateral light according to a detection of the detecting element; and

an image-processing unit, connecting electrically the image-sensing unit and the controller, for performing a pre-management and a feature-capturing management while receiving the detection signal from the image-sensing unit;

wherein the pre-management is to perform de-noise and image optimization processes upon the detection signal, and the feature-capturing management is to extract a fingerprint feature data and a vein feature data from the fingerprint image and the vein image of the detection signal.

14. A biometric authentication method, for verifying at least a biometric on a portion of a creature (portion-to-be-verified or PTBV, thereinafter), comprising the steps of:

providing a biometric authentication device, the biometric authentication device comprising:

a carrier base, at least one light source unit, an image-sensing unit and a control module;

the carrier base being used to receive the PTBV, the at least one light source unit being to project a light onto the PTBV so as to generate a fingerprint image and a vein image corresponding to the PTBV, the image-sensing unit being to receive the fingerprint image and the vein image and thereby further to generate a detection signal readable to a computer; wherein the detection signal includes simultaneous messages of the fingerprint image and the vein image;

wherein the control module connecting electrically at least with the at least one light source unit and the image-sensing unit is to receive the detection signal from the image-sensing unit;

arranging the PTBV to the biometric authentication device so as thereby to generate simultaneously the detection signal including the messages of the fingerprint image and the vein image; and

the control module of the biometric authentication device receiving the detection signal and further extracting thereinside a fingerprint feature data from the fingerprint image and a vein feature data from the vein image, and then these extracted fingerprint feature data and vein feature data being analyzed for authentication purpose;

wherein:

the carrier base has an upper opening for receiving the PTBV, which the upper opening further has a base plane and at least one lateral surface;

the biometric authentication device further includes a position structure and a light guide module, the position structure being located at the carrier base at a position respective to the upper opening and being used to assist the PTBV to anchor at a predetermined position at the carrier base in the upper opening, the light guide module being located inside the carrier base at a position under the base plane respective to the upper opening;

the at least one light source unit is located at the at least one lateral surface of the carrier base respective to the upper opening; in the case that the PTBV reaches the predetermined position, the at least one light source unit being able to project at least one lateral light onto the PTBV so as to generate simultaneously the fingerprint image and the vein image of the PTBV;

the image-sensing unit is located inside the carrier base, the fingerprint image and the vein image of the PTBV entering the carrier base via the base plane of the upper opening the light guide module leading the fingerprint image and the vein image to the imaqe-sensinq unit;

a light guide module is located inside the carrier base at a position under the base plane respective to the upper opening;

the light guide module further includes at least one prism unit and is separated into a fingerprint-detecting area and a vein-detecting area; the PTBV is at least a portion of a first finger member and a second finger member of a finger;

the position structure formed as a finger-anchoring structure located on the base plane further includes a front window, a rear window and a position rib between the front window and the rear window; while an inter-member valley between the first finger member and the second finger member falls onto the position rib, the first finger member is anchored in the front window and the second finger member is anchored in the rear window;

the fingerprint-detecting area is respective to the front window and the vein-detecting area is respective to the rear window;

the light guide module has one single prism unit separated into the fingerprint-detecting area and the vein-detecting area;

the fingerprint-detecting area of the prism unit further includes thereof a top surface, a bottom surface opposing to the top surface, an imaging surface connecting in-between the top surface and the bottom surface, and an anti-reflection surface opposing to the imaging surface, the top surface being neighbored to the front window of the position structure;

when the PTBV is anchored at the predetermined position in the upper opening, the first finger member of the finger contacting the to surface of the fingerprint-detectinq area, the fingerprint image entering the fingerprint-detecting area of the prism unit via the top surface of the fingerprint-detecting area, the fingerprint image being reflected at least once by the bottom surface of the fingerprint-detectinq area and then leaving the prism unit through the imaging surface of the fingerprint-detecting area, an oblique angle of the imaging surface of the fingerprint-detecting area helping the leaving fingerprint image to form on the image-sensing unit, the anti-reflection surface being there to reduce the reflection while lights in the fingerprint-detecting area are projected onto the anti-reflection surface; and

the vein-detecting area of the prism unit further includes thereof another top surface, another bottom surface opposing to the another top surface, another imaging surface connecting in-between the another top surface and the another bottom surface, and an reflection surface opposing to the another imaging surface and connecting obliquely the another bottom surface; the top surface of the vein-detecting area being neighbored to the rear window of the position structure; when the PTBV is anchored at the predetermined position in the upper opening, the second finger member of the finger being above the top surface of the vein-detecting area without any contact in between, the vein image entering the vein-detecting area of the prism unit via the top surface of the vein-detecting area, the vein image being reflected at least once individually by the reflection surface, the top surface and the bottom surface of the vein-detecting area and then leaving the prism unit through the imaging surface of the vein-detecting area, an oblique angle of the imaging surface of the vein-detecting area helping the leaving vein image to form on the image-sensing unit; an imaging optical path of the vein image being dependent on a vertical height between the top surface and the bottom surface of the vein-detecting area and a reflection frequency of the vein image inside the vein-detecting area, in which the reflection frequency is determined by the oblique angle between the reflection surface and the bottom surface of the vein-detecting area.

15. The biometric authentication method according to claim **14**, wherein the at least one light source unit further includes a plurality of Infra-red Vertical-cavity Surface-emitting Lasers (IR-VCSELs), and a vertical height h**1** between a mean central point of the at least one light source unit at a perpendicular direction and the base plane of the upper opening is no less than one half of a mean vertical thickness h**2** of the PTBV.

16. The biometric authentication method according to claim **15**, wherein the at least one lateral light projected by the at least one light source unit defines a virtual central projection line, a projection direction of the at least one image response downward into the carrier base defines a virtual vertical projection line, and the angle θ between the virtual central projection line and the virtual vertical projection line is ranged between 30 and 150 degrees.

17. The biometric authentication method according to claim **14**, further including a light-shielding plate located at the position structure.

18. The biometric authentication method according to claim **14**, wherein the control module further including:

a detecting element for detecting if or not the PTBV is in the upper opening;

a controller, connecting electrically the detecting element, for determining the at least one light source unit to project the at least one lateral light according to a detection of the detecting element; and

an image-processing unit, connecting electrically the image-sensing unit and the controller, for performing a pre-management and a feature-capturing management while receiving the detection signal from the image-sensing unit;

wherein the pre-management is to perform de-noise and image optimization processes upon the detection signal, and the feature-capturing management is to extract a fingerprint feature data and a vein feature data from the fingerprint image and the vein image of the detection signal.

* * * * *